EDSVF9333V
13347725

System Manual

9300 vector *0.37 ... 90 kW*

EVF9321-xV ... EVF9333-xV

Frequency inverter

Lenze

1 Preface 1-1

1.1 How to use this System Manual 1.1-1
1.1.1 Information provided by the System Manual 1.1-1
1.1.2 Document history 1.1-2
1.1.3 Products to which the System Manual applies 1.1-3
1.2 Legal regulations 1.2-1
1.3 Conventions used 1.3-1
1.4 Notes used 1.4-1

2 Safety instructions 2-1

2.1 General safety information 2.1-1
2.2 Thermal motor monitoring 2.2-1
2.2.1 Description 2.2-1
2.2.2 Parameter setting 2.2-2
2.3 Residual hazards 2.3-1
2.4 Safety instructions for the installation according to UL or UR 2.4-1

3 Technical data 3-1

3.1 General data and operating conditions 3.1-1
3.2 Open and closed loop control 3.2-1
3.3 Safety relay KSR 3.3-1
3.4 Operation with rated power (normal operation) 3.4-1
3.4.1 Rated data for 400 V mains voltage 3.4-1
3.4.2 Rated data for 480 V mains voltage 3.4-3
3.5 Operation with increased rated power 3.5-1
3.5.1 Rated data for 400 V mains voltage 3.5-1
3.6 Current characteristics 3.6-1

4 Installation of the standard device 4-1

4.1 Standard devices in the power range 0.37 ... 11 kW 4.1-1
4.1.1 Important notes 4.1-1
4.1.2 Mounting with fixing rails (standard) 4.1-2
4.1.3 Thermally separated mounting (push-through technique) 4.1-3
4.1.4 Mounting in ”cold plate” technique 4.1-4
4.2 Standard devices in the power range 15 ... 30 kW 4.2-1
4.2.1 Important notes 4.2-1
4.2.2 Mounting with fixing brackets (standard) 4.2-2
4.2.3 Thermally separated mounting (push-through technique) 4.2-3
4.2.4 Mounting in ”cold plate” technique 4.2-4

4.3 Standard devices with a power of 45 kW 4.3-1
4.3.1 Important notes 4.3-1
4.3.2 Mounting with fixing brackets (standard) 4.3-2
4.3.3 Thermally separated mounting (push-through technique) . 4.3-3
4.4 Standard devices in the power range of 55 kW 4.4-1
4.4.1 Important notes 4.4-1
4.4.2 Mounting with fixing brackets (standard) 4.4-2
4.4.3 Thermally separated mounting (push-through technique) . 4.4-3
4.4.4 Modification of the fan module for push-through technique 4.4-4
4.5 Standard devices in the power range 75 ... 90 kW 4.5-1
4.5.1 Important notes 4.5-1
4.5.2 Mounting with fixing brackets (standard) 4.5-2
4.5.3 Thermally separated mounting (push-through technique) . 4.5-3

5 Wiring of the standard device 5-1
5.1 Important notes 5.1-1
5.1.1 Protection of persons 5.1-1
5.1.2 Device protection 5.1-3
5.1.3 Motor protection 5.1-3
5.2 Notes on project planning 5.2-1
5.2.1 Supply forms / electrical supply conditions 5.2-1
5.2.2 Operation on public supply systems (compliance with EN 61000-3-2) 5.2-1
5.2.3 Controllers in the IT system 5.2-2
5.2.4 Operation at earth-leakage circuit breaker (e.l.c.b.) 5.2-3
5.2.5 Interaction with compensation equipment 5.2-3
5.2.6 Discharge current for mobile systems 5.2-4
5.2.7 Optimisation of the controller and mains load 5.2-5
5.2.8 Reduction of noise emissions 5.2-6
5.2.9 Mains choke/mains filter assignment 5.2-8
5.2.10 Motor cable 5.2-10
5.3 Basics for wiring according to EMC 5.3-1
5.3.1 Shielding 5.3-1
5.3.2 Mains connection, DC supply 5.3-1
5.3.3 Motor cable 5.3-1
5.3.4 Control cables 5.3-3
5.3.5 Installation in the control cabinet 5.3-4
5.3.6 Wiring outside of the control cabinet 5.3-5
5.3.7 Detecting and eliminating EMC interferences 5.3-6

5.4 Standard devices in the power range 0.37 ... 11 kW 5.4-1
5.4.1 Wiring according to EMC (CE-typical drive system) 5.4-1
5.4.2 Important notes 5.4-3
5.4.3 Mains connection, DC supply 5.4-4
5.4.4 Mains connection: Fuses and cable cross-sections 5.4-5
5.4.5 Mains choke/mains filter assignment 5.4-8
5.4.6 Motor connection 5.4-9
5.5 Standard devices in the power range 15 ... 30 kW 5.5-1
5.5.1 Wiring according to EMC (CE-typical drive system) 5.5-1
5.5.2 Important notes 5.5-3
5.5.3 Mains connection, DC supply 5.5-4
5.5.4 Mains connection: Fuses and cable cross-sections 5.5-5
5.5.5 Mains choke/mains filter assignment 5.5-7
5.5.6 Motor connection 5.5-8
5.6 Standard devices in the power range of 55 kW 5.6-1
5.6.1 Wiring according to EMC (CE-typical drive system) 5.6-1
5.6.2 Important notes 5.6-3
5.6.3 Mains connection, DC supply 5.6-4
5.6.4 Mains connection: Fuses and cable cross-sections 5.6-5
5.6.5 Mains choke/mains filter assignment 5.6-6
5.6.6 Motor connection 5.6-7
5.7 Standard devices in the power range 75 ... 90 kW 5.7-1
5.7.1 Wiring according to EMC (CE-typical drive system) 5.7-1
5.7.2 Important notes 5.7-3
5.7.3 Mains connection, DC supply 5.7-4
5.7.4 Mains connection: Fuses and cable cross-sections 5.7-5
5.7.5 Mains choke/mains filter assignment 5.7-6
5.7.6 Motor connection 5.7-7
5.8 Control terminals 5.8-1
5.8.1 Important notes 5.8-1
5.8.2 Connection terminal of the control card 5.8-3
5.8.3 Device variant without ”Safe torque off” function 5.8-4
5.8.4 Device variant with ”Safe torque off” function 5.8-5
5.8.5 Terminal assignment 5.8-8
5.9 Wiring of the system bus (CAN) 5.9-1
5.10 Wiring of the feedback system 5.10-1
5.10.1 Important notes 5.10-1
5.10.2 Incremental encoder with TTL level at X8 . . . . . 5.10-2
5.10.3 Incremental encoder with HTL level at X9 . . . . . 5.10-3
5.11 Wiring of digital frequency input / digital frequency output 5.11-1
5.12 Communication modules 5.12-1

6 **Commissioning** **6-1**

6.1 Before switching on 6.1-1

6.2 Selection of the correct operating mode 6.2-1

6.3 Parameter setting with the XT EMZ9371BC keypad 6.3-1

6.3.1 Commissioning example in V/f characteristic control mode 6.3-1

6.3.2 Commissioning example in vector control mode 6.3-5

6.4 Controller inhibit 6.4-1

6.5 Changing the assignment of the control terminals X5 and X6 . . . . . 6.5-1

6.5.1 Free configuration of digital input signals 6.5-1

6.5.2 Free configuration of digital outputs 6.5-3

6.5.3 Free configuration of analog input signals 6.5-4

6.5.4 Free configuration of analog outputs 6.5-6

6.6 Adjusting the motor 6.6-1

6.6.1 Entry of motor data 6.6-1

6.6.2 Motor selection list 6.6-4

6.6.3 Motor temperature monitoring with PTC or thermal contact 6.6-8

6.6.4 Motor temperature monitoring with KTY 6.6-10

6.6.5 Current limits 6.6-13

6.6.6 Automatic collection of motor data 6.6-14

6.7 Setting the speed feedback 6.7-1

6.7.1 Incremental encoder with TTL level at X8 . . . . . 6.7-2

6.7.2 Incremental encoder with HTL level at X9 . . . . . 6.7-3

6.8 Operating mode 6.8-1

6.8.1 V/f characteristic control 6.8-4

6.8.2 Vector control 6.8-8

6.9 Switching frequency of the inverter 6.9-1

6.10 Acceleration, deceleration, braking, stopping 6.10-1

6.10.1 Speed range 6.10-1

6.10.2 Setting acceleration times and deceleration times in speed mode 6.10-3

6.10.3 Quick stop 6.10-4

6.10.4 Changing the direction of rotation 6.10-5

6.11 Optimising the operating behaviour 6.11-1

6.11.1 Slip compensation 6.11-1

6.11.2 Oscillation damping 6.11-3

6.11.3 Boost correction with V/f characteristic control 6.11-5

6.11.4 Motor magnetising current with vector control 6.11-9

7 Parameter setting 7-1

7.1 Important notes 7.1-1

7.2 Parameter setting with the XT EMZ9371BC keypad 7.2-1

7.2.1 General data and operating conditions 7.2-1

7.2.2 Installation and commissioning 7.2-2

7.2.3 Display elements and function keys 7.2-2

7.2.4 Changing and saving parameters 7.2-4

7.2.5 Loading a parameter set 7.2-6

7.2.6 Transferring parameters to other standard devices 7.2-7

7.2.7 Activating password protection 7.2-9

7.2.8 Diagnostics 7.2-10

7.2.9 Menu structure 7.2-11

8 Configuration 8-1

8.1 Important notes 8.1-1

8.2 Function blocks 8.2-1

8.2.1 Diameter calculator (DCALC) 8.2-1

8.2.2 Master frequency input (DFIN) 8.2-5

8.2.3 Master frequency output (DFOUT) 8.2-8

8.2.4 Master frequency ramp-function generator (DFRFG) 8.2-13

8.2.5 Master frequency processing (DFSET) 8.2-18

8.2.6 Internal motor control with V/f characteristic control (MCTRL1) 8.2-25

8.2.7 Internal motor control with vector control (MCTRL2) 8.2-48

8.3 Monitoring 8.3-1

8.3.1 Fault responses 8.3-1

8.3.2 Monitoring times for process data input objects 8.3-2

8.3.3 Maximum speed 8.3-3

8.3.4 Motor 8.3-3

8.3.5 Controller current load (I x t monitoring) 8.3-4

8.3.6 Motor temperature 8.3-5

8.3.7 Current load of motor (I^2 x t monitoring: OC6, OC8) 8.3-6

8.3.8 Heatsink temperature 8.3-7

8.3.9 DC-bus voltage 8.3-8

8.3.10 External error (EEr) 8.3-8

8.4 Overview of monitoring functions 8.41

8.5 Code table 8.5-1

8.6 Selection lists 8.6-1
8.6.1 Selection list 1: Analog output signals 8.6-1
8.6.2 Selection list 2: Digital output signals 8.6-3
8.6.3 Selection list 3: Angle signals 8.6-6
8.6.4 Selection list 4: Speed signals 8.6-6
8.6.5 Selection list 5: Function blocks 8.6-7
8.7 Table of attributes 8.7-1

9 Troubleshooting and fault elimination 9-1
9.1 Display of operating data, diagnostics 9.1-1
9.1.1 Display of operating data 9.1-1
9.1.2 Diagnostics 9.1-2
9.2 Troubleshooting 9.2-1
9.2.1 Status display via controller LEDs 9.2-1
9.2.2 Fault analysis with the history buffer 9.2-1
9.3 Drive behaviour in the event of faults 9.3-1
9.4 Fault elimination 9.4-1
9.4.1 Drive errors 9.4-1
9.4.2 Controller in clamp operation 9.4-2
9.4.3 Behaviour in case of overvoltage in the DC bus (OU message) 9.4-3
9.5 System error messages 9.5-1
9.5.1 General error messages 9.5-1
9.5.2 Resetting system error messages 9.5-5

10 DC-bus operation 10-1
10.1 Function 10.1-1
10.2 Conditions for trouble-free DC-bus operation 10.2-1
10.3 Fuses and cable cross-sections 10.3-1
10.4 Distributed supply (several supply points) 10.4-1
10.5 Central supply (one supply point) 10.5-1

11 Safety engineering 11-1
11.1 Important notes 11.1-1
11.2 Operating mode 11.2-1
11.3 Safety relay KSR 11.3-1
11.4 Functional test 11.4-1
11.4.1 Important notes 11.4-1
11.4.2 Manual safety function check 11.4-2
11.4.3 Monitoring the safety function with a PLC 11.4-3

12 Accessories (overview) 12-1
12.1 General accessories 12.1-1
12.2 Type-specific accessories 12.2-1
12.2.1 Operation with rated power 12.2-1
12.2.2 Operation with increased rated power 12.2-3

13 Appendix 13-1
13.1 Glossary 13.1-1
13.1.1 Terminology and abbreviations used 13.1-1
13.2 Index 13.2-1

1 Preface

Contents

1.1 How to use this System Manual 1.1-1
1.1.1 Information provided by the System Manual 1.1-1
1.1.2 Document history 1.1-2
1.1.3 Products to which the System Manual applies 1.1-3
1.2 Legal regulations 1.2-1
1.3 Conventions used 1.3-1
1.4 Notes used 1.4-1

1.1 How to use this System Manual

1.1.1 Information provided by the System Manual

Target group

This System Manual is intended for all persons who design, install, commission, and adjust the 9300 vector frequency inverter.

Together with the System Manual (extension), document number EDSV9383V-EXT and the catalog it forms the basis for project planning for the manufacturer of plants and machinery.

Contents

The System Manual is the basis for the description of the 9300 vector frequency inverter. Together with the System Manual (extension), document number EDSVF9383V-EXT, a complete System Manual is available:

- ► The features and functions are described in detail.
- ► Examples describe how to set the parameters for typical applications.
- ► In case of doubt, the Operating Instructions delivered together with the 9300 vector frequency inverter always apply.

Contents of the System Manual	Contents of the System Manual (extension)
1 Preface	1 Preface
2 Safety	–
3 Technical data	–
4 Installing the standard device	–
5 Wiring the standard device	–
6 Commissioning	–
7 Parameter setting	–
8 Configuration	2 Configuration
8.1 Description of function blocks Diameter calculator (DCALC) Master frequency input (DFIN) Master frequency output (DFOUT) Master frequency ramp function generator (DFRFG) Master frequency processing (DFSET) Internal motor control with V/f characteristic control (MCTRL1) Internal motor control with vector control (MCTRL2)	2.1 Configuring with Global Drive Control 2.2 Basic configurations 2.3 How to use function blocks 2.4 Function blocks (Description of the other function blocks) 2.5 Monitoring
8.2 Code table	
8.3 Selection lists	
8.4 Table of attributes	
9 Troubleshooting and fault elimination	–
10 DC-bus operation	–
11 Safety engineering	–
–	3 Application examples
–	4 Signal flow diagrams
12 Accessories	–
13 Appendix	5 Appendix

How to find information

Use the System Manual as the basis. It contains references to the corresponding chapters in the System Manual Supplement:

- ► Each chapter is a complete unit and comprehensively informs about a subject.
- ► The Table of Contents and Index help you to find all information about a certain topic.
- ► Descriptions and data of other Lenze products (Drive PLC, Lenze geared motors, Lenze motors, ...) can be found in the corresponding catalogs, Operating Instructions and manuals. The required documentation can be ordered at your Lenze sales partner or downloaded as PDF file from the Internet.

Tip!

Information and auxiliary devices related to the Lenze products can be found in the download area at

http://www.Lenze.com

1.1.2 Document history

What is new / what has changed?

Material number	Version			Description
13347725	6.2	04/2012	TD23	Error corrections
13347725	6.0	09/2010	TD23	Revision for software version 8.0. Error corrections
13189122	3.0	06/2005	TD23	The documentation is divided into 2 parts: System Manual and System Manual (extension). Complete revision for software version 7.0.
00410591	2.0	05/1999	-	Documentation for hardware version 3.x and software version 2.x.

1.1.3 Products to which the System Manual applies

This documentation applies to 9300 frequency inverters as of version:

	①						②	③	Nameplate
	EVF	93xx	–	E	V	Vxxx	6x	8x	

Product range

EVF	Frequency inverter

Type no. / power

	400 V	480 V
9321	0.37 kW	0.37 kW
9322	0.75 kW	0.75 kW
9323	1.5 kW	1.5 kW
9324	3.0 kW	3.0 kW
9325	5.5 kW	5.5 kW
9326	11 kW	11 kW
9327	15 kW	18.5 kW
9328	22 kW	30 kW
9329	30 kW	37 kW
9330	45 kW	55 kW
9331	55 kW	75 kW
9332	75 kW	90 kW
9333	90 kW	110 kW

Design

E	Built-in unit (standard mounting)
C	Cold plate technique

Version

V	Vector-controlled frequency inverter

Variant

–	Standard
V003	Cold plate
V004	Safe standstill
V024	Safe standstill and IT system
V100	IT system

Hardware version

Software version

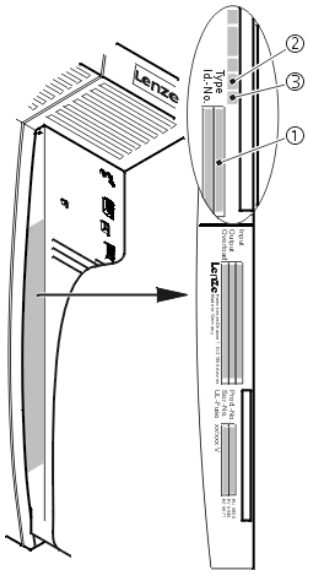

1.2 Legal regulations

Labelling

Lenze controllers are unambiguously designated by the contents of the nameplate.

Manufacturer

Lenze Automation GmbH, Hans-Lenze-Str. 1, D-31855 Aerzen, Germany

CE conformity

Conforms to the EC Low-Voltage Directive

Application as directed

9300 vector frequency inverter and accessories

- ► must only be operated under the conditions prescribed in this System Manual.
- ► are components
  - – for open and closed loop control of variable speed drives with asynchronous standard motor or asynchronous servo motors
  - – for installation in a machine
  - – for assembly with other components to form a machine.
- ► comply with the requirements of the Low-Voltage Directive.
- ► are not machines for the purpose of the Machinery Directive.
- ► are not to be used as domestic appliances, but only for industrial purposes.

Drives with 9300 vector frequency inverters

- ► comply with the EMC Directive if they are installed according to the guidelines of CE-typical drive systems.
- ► can be used
  - – for operation on public and non-public mains
  - – for operation in industrial premises and residential areas.
- ► The user is responsible for the compliance of his application with the EC directives.

Any other use shall be deemed as inappropriate!

Liability

The information, data, and notes in this System Manual met the state of the art at the time of printing. Claims on modifications referring to controllers and components which have already been supplied cannot be derived from the information, illustrations, and descriptions.

The specifications, processes, and circuitry described in this System Manual are for guidance only and must be adapted to your own specific application. Lenze does not take responsibility for the suitability of the process and circuit proposals.

The specifications in this System Manual describe the product features without guaranteeing them.

Lenze does not accept any liability for damage and operating interference caused by:

- ► Disregarding the System Manual
- ► Unauthorised modifications to the controller
- ► Operating errors
- ► Improper working on and with the controller

Warranty

See terms of sales and delivery of the Lenze Automation GmbH.

Warranty claims must be made to Lenze immediately after detecting the deficiency or fault.

The warranty is void in all cases where liability claims cannot be made.

1.3 Conventions used

This documentation uses the following conventions to distinguish between different types of information:

Type of information	Identification	Examples/notes
Spelling of numbers		
Decimal separator	language-dependent	In each case, the signs typical for the target language are used as decimal separators. For example: 1234.56 or 1234,56
Warnings		
UL warnings	Ⓤ	Are only given in English.
UR warnings		
Text		
Program name	» «	PC software For example: »Engineer«, »Global Drive Control« (GDC)
Icons		
Page reference	🕮	Reference to another page with additional information For instance: 🕮 16 = see page 16

1.4 Notes used

The following pictographs and signal words are used in this documentation to indicate dangers and important information:

Safety instructions

Structure of safety instructions:

Danger!
(characterises the type and severity of danger)
Note
(describes the danger and gives information about how to prevent dangerous situations)

Pictograph and signal word	Meaning
Danger!	**Danger of personal injury through dangerous electrical voltage.** Reference to an imminent danger that may result in death or serious personal injury if the corresponding measures are not taken.
Danger!	**Danger of personal injury through a general source of danger.** Reference to an imminent danger that may result in death or serious personal injury if the corresponding measures are not taken.
Stop!	**Danger of property damage.** Reference to a possible danger that may result in property damage if the corresponding measures are not taken.

Application notes

Pictograph and signal word	Meaning
Note!	Important note to ensure troublefree operation
Tip!	Useful tip for simple handling
	Reference to another documentation

Special safety instructions and application notes for UL and UR

Pictograph and signal word	Meaning
Warnings!	**Safety or application note for the operation of a UL-approved device in UL-approved systems.** Possibly the drive system is not operated in compliance with UL if the corresponding measures are not taken.
Warnings!	**Safety or application note for the operation of a UR-approved device in UL-approved systems.** Possibly the drive system is not operated in compliance with UL if the corresponding measures are not taken.

2 Safety instructions

Contents

2.1 General safety information 2.1-1
2.2 Thermal motor monitoring 2.2-1
2.2.1 Description 2.2-1
2.2.2 Parameter setting 2.2-2
2.3 Residual hazards 2.3-1
2.4 Safety instructions for the installation according to UL or UR 2.4-1

2.1 General safety information

Scope

The following general safety instructions apply to all Lenze drive and automation components.

The product-specific safety and application notes given in this documentation must be observed!

Note for UL-approved systems: UL warnings are notes which only apply to UL systems. The documentation contains specific notes with regard to UL.

For your own safety

Danger!
Disregarding the following basic safety measures may lead to severe personal injury and damage to material assets!

► Lenze drive and automation components ...
... must only be used for the intended purpose.
... must never be operated if damaged.
... must never be subjected to technical modifications.
... must never be operated unless completely assembled.
... must never be operated without the covers/guards.
... can - depending on their degree of protection - have live, movable or rotating parts during or after operation. Surfaces can be hot.

► All specifications of the corresponding enclosed documentation must be observed.
This is vital for a safe and trouble-free operation and for achieving the specified product features.
The procedural notes and circuit details provided in this document are proposals which the user must check for suitability for his application. The manufacturer does not accept any liability for the suitability of the specified procedures and circuit proposals.

► Only qualified skilled personnel are permitted to work with or on Lenze drive and automation components.
According to IEC 60364 or CENELEC HD 384, these are persons ...
... who are familiar with the installation, assembly, commissioning and operation of the product,
... possess the appropriate qualifications for their work,
... and are acquainted with and can apply all the accident prevent regulations, directives and laws applicable at the place of use.

Transport, storage

► Transport and storage in a dry, low-vibration environment without aggressive atmosphere; preferably in the packaging provided by the manufacturer.
– Protect against dust and shocks.
– Comply with climatic conditions according to the technical data.

Mechanical installation

- ► Install the product according to the regulations of the corresponding documentation. In particular observe the section ”Operating conditions” in the chapter ”Technical data”.
- ► Provide for a careful handling and avoid mechanical overload. During handling neither bend components, nor change the insulation distances.
- ► The product contains electrostatic sensitive devices which can easily be damaged by short circuit or static discharge (ESD). Thus, electronic components and contacts must not be touched unless ESD measures are taken beforehand.

Electrical installation

- ► Carry out the electrical installation according to the relevant regulations (e. g. cable cross-sections, fusing, connection to the PE conductor). Additional notes are included in the documentation.
- ► When working on live products, observe the applicable national regulations for the prevention of accidents (e.g. BGV 3).
- ► The documentation contains information about EMC-compliant installation (shielding, earthing, arrangement of filters and laying cables). The system or machine manufacturer is responsible for compliance with the limit values required by EMC legislation.
  Warning: The controllers are products which can be used in category C2 drive systems as per EN 61800-3. These products may cause radio interference in residential areas. If this happens, the operator may need to take appropriate action.
- ► For compliance with the limit values for radio interference emission at the site of installation, the components - if specified in the technical data - have to be mounted in housings (e. g. control cabinets). The housings have to enable an EMC-compliant installation. In particular observe that for example control cabinet doors preferably have a circumferential metallic connection to the housing. Reduce openings or cutouts through the housing to a minimum.
- ► Only plug in or remove pluggable terminals in the deenergised state!

Commissioning

- ► If required, you have to equip the system with additional monitoring and protective devices in accordance with the respective valid safety regulations (e. g. law on technical equipment, regulations for the prevention of accidents).
- ► Before commissioning remove transport locking devices and keep them for later transports.

Operation

- ► Keep all protective covers and doors closed during operation.

Safety functions

- ► Without a higher-level safety system, the described product must neither be used for the protection of machines nor persons.
- ► Certain controller versions support safety functions (e.g. ”Safe torque off”, formerly ”Safe standstill”).
  The notes on the safety functions provided in the documentation of the versions must be observed.

Maintenance and servicing

- ► The components are maintenance-free if the required operating conditions are observed.
- ► If the cooling air is polluted, the cooling surfaces may be contaminated or the air vents may be blocked. Under these operating conditions, the cooling surfaces and air vents must be cleaned at regular intervals. Never use sharp objects for this purpose!
- ► Only replace defective fuses in the deenergised state to the type specified.
- ► After the system has been disconnected from the supply voltage, live components and power connections must not be touched immediately because capacitors may be charged. Please observe the corresponding notes on the device.

Disposal

- ► Recycle metals and plastic materials. Ensure professional disposal of assembled PCBs.

2.2 Thermal motor monitoring

2.2.1 Description

Note!

From software version 8.0 onwards, the 9300 controllers are provided with an I^2xt function for sensorless thermal monitoring of the connected motor.

- ► I^2xt monitoring is based on a mathematical model which calculates a thermal motor utilisation from the detected motor currents.
- ► The calculated motor utilisation is saved when the mains is switched off.
- ► The function is UL-certified, i.e. additional protective measures for the motor are not required in UL-approved systems.
- ► Nevertheless, I^2xt monitoring does **not** provide full motor protection because other influences on the motor utilisation such as changes in the cooling conditions (e.g. cooling air flow interrupted or too warm) cannot be detected.

The $I^2 \times t$-load of the motor is constantly calculated by the drive controller and displayed in C0066.

The I^2 x t-monitoring is designed in a way, that a motor with a thermal motor time factor of 5 min, a motor current of 1.5 x I_r and a trigger threshold of 100 % releases the monitoring after 179 s.

You can set different reactions with two adjustable trigger thresholds.

► Adjustable reaction OC8 (TRIP, Warning, Off).
- – The reaction is set in C0606.
- – The trigger threshold is set in C0127.
- – The reaction OC8 can be used for example for an advance warning.

► Fixed reaction OC6-TRIP.
- – The trigger threshold is set in C0120.

Response of the I^2 x t-monitoring	Condition
The I^2 x t-monitoring is deactivated. C0066 = 0 % and MCTRL-LOAD-I2XT = 0,00 % is set.	Set the controller inhibit at C0120 = 0 % and C0127 = 0 %.
The I^2 x t-monitoring is stopped. The actual value in C0066 and at the MCTRL-LOAD-I2XT output is held.	Allow controller release at C0120 = 0 % and C0127 = 0 %.
The I^2 x t-monitoring is deactivated. The motor load is displayed in C0066.	Set C0606 = 3 (Off) and C0127 > 0 %.

Note!

An OC6 or OC8 error message can only be reset if the $I^2 \times t$-monitoring has fallen below the set trigger threshold by 5 %.

2.2.2 Parameter setting

Parameter setting			
Code	**Meaning**	**Value range**	**Lenze setting**
C0066	Display of the I^2xt utilisation of the motor	0 ... 250 %	-
C0120	Threshold: Triggering of an ”OC6” error	0 ... 120 %	0 %
C0127	Threshold: Triggering of an ”OC8” error	0 ... 120 %	0 %
C0128	Thermal time constant of the motor	0.1 ... 50.0 min	5.0 min
C0606	Response to ”OC8” error	Trip, warning, off	Warning

Calculating the release time

$$t = -(C0128) \cdot \ln\left(1 - \frac{y+1}{\left(\frac{I_M}{I_r}\right)^2 \cdot 100}\right)$$

I_M Actual motor current

I_r Rated motor current

y C0120 or C0127

► The thermal capacity of the motor is expressed by the thermal motor time factor (C0128). Please see the rated data of the motor for the value or ask the manufacturer of the motor.

Reading the release time off the diagram

Diagram for the determination of the release times of a motor with a thermal motor time factor of 5 min:

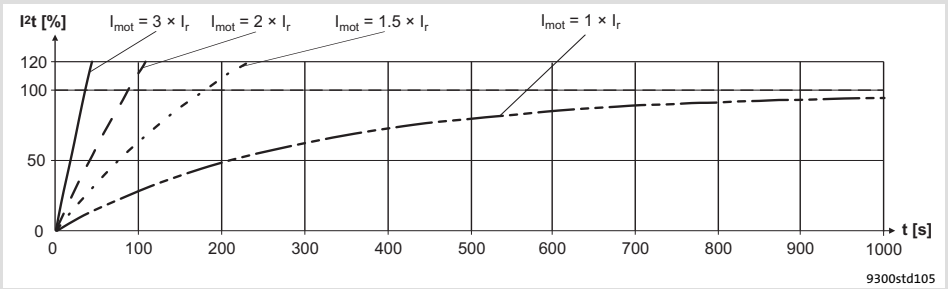

Fig. 2.2-1 I^2 × t-monitoring: Release times for different motor currents and trigger thresholds

Imot	Motor current
I_r	Rated motor current
I^2t	I^2t load
T	Time

2.3 Residual hazards

Protection of persons

- ▶ According to their enclosure, Lenze controllers (frequency inverters, servo inverters, DC speed controllers) and their components can carry a voltage, or parts of the controllers can move or rotate during operation. Surfaces can be hot.
  - – If the required cover is removed, the controllers are used inappropriately or installed or operated incorrectly, severe damage to persons or material assets can occur.
  - – For more detailed information please see the documentation.
- ▶ There is a high amount of energy within the controller. Therefore always wear personal protective equipment (body protection, headgear, eye protection, ear protection, hand guard) when working on the controller when it is live.
- ▶ Before working on the controller, check if no voltage is applied to the power terminals.
  - – the power terminals U, V, W, +UG and -UG still carry dangerous voltage for at least 3 minutes after power-off.
  - – the power terminals L1, L2, L3; U, V, W, +UG and -UG carry dangerous voltage when the motor is stopped.
- ▶ Before power-off during DC-bus operation, all controllers must be inhibited and disconnected from the mains.
- ▶ The discharge current to PE potential is > 3.5 mA. In accordance with EN 61800-5-1
  - – a fixed installation is required.
  - – the design of the PE conductor has to be double or, in the case of a single design, must have a cable cross-section of at least 10 mm^2.
- ▶ The controller can only be safely disconnected from the mains via a contactor on the input side.
- ▶ During parameter set transfer the control terminals of the controller can have undefined states.
  - – Therefore the connectors X5 and X6 must be disconnected from the controller before the transfer takes place. This ensures that the controller is inhibited and all control terminals have the defined state ”LOW”.
- ▶ If you use the ”flying-restart circuit” function (C0142 = 2, 3) for machines with a low moment of inertia and minimum friction:
  - – After controller enable in standstill, the motor may start or change its direction of rotation for a short time, because the flying restart process also is carried out at a speed of 0.

- Controllers can cause a DC current in the PE conductor. If a residual current device (RCD) or a fault current monitoring unit (RCM) is used for protection in the case of direct or indirect contact, only one RCD/RCM of the following type can be used on the current supply side:
  - Type B for the connection to a three-phase system
  - Type A or type B for the connection to a single phase system

  Alternatively another protective measure can be used, like for instance isolation from the environment by means of double or reinforced insulation, or isolation from the supply system by using a transformer.

Device protection

- Frequent mains switching (e.g. inching mode via mains contactor) can overload and destroy the input current limitation of the drive controller:
  - At least 3 minutes must pass between switching off and restarting the devices EVF9321-xV and EVF9322-xV.
  - At least 3 minutes must pass between two starting procedures of the devices EVF9323-xV ... EVF9333-xV.
  - Use the ”safe torque off” safety function (STO) if safety-related mains disconnections occur frequently. The drive variants Vxx4 are equipped with this function.

Motor protection

- For some controller settings, the connected motor may overheat (e.g. when operating the DC injection brake or a self-ventilated motor at low speed for longer periods).
  - Using an overcurrent relay or a temperature monitoring device provides a large degree of protection against overload.
  - We recommend to use PTC thermistors or thermal contacts for motor temperature monitoring. (Lenze three-phase AC motors are equipped with thermal contacts (NC contacts) as standard)
  - PTC thermistors or thermal contacts can be connected to the controller.
- Drives can attain dangerous overspeeds (e.g. setting of high output frequencies with motors and machines not qualified for this purpose).

2.4 Safety instructions for the installation according to U_L or U_R

Warnings!

► Motor Overload Protection
- For information on the protection level of the internal overload protection for a motor load, see the corresponding manuals or software helps.
- If the integral solid state motor overload protection is not used, external or remote overload protection must be provided.

► Branch Circuit Protection
- The integral solid state protection does not provide branch circuit protection.
- Branch circuit protection has to be provided externally in accordance with corresponding instructions, the National Electrical Code and any additional codes.

► Please observe the specifications for fuses and screw-tightening torques in these instructions.

► EVF9321 ... EVF9326:
- Suitable for use on a circuit capable of delivering not more than 5000 rms symmetrical amperes, 480 V maximum, when protected by fuses.
- Suitable for use on a circuit capable of delivering not more than 50000 rms symmetrical amperes, 480 V maximum, when protected by CC, J, T or R class fuses.
- Maximum surrounding air temperature: 0 ... +55 °C
- > +40 °C: reduce the rated output current by 2.5 %/°C
- Use 75 °C copper wire only.

► EVF9327 ... EVF9329:
- Suitable for use on a circuit capable of delivering not more than 5000 rms symmetrical amperes, 480 V maximum, when protected by fuses.
- Suitable for use on a circuit capable of delivering not more than 50000 rms symmetrical amperes, 480 V maximum, when protected by J, T or R class fuses.
- Maximum surrounding air temperature: 0 ... +50 °C
- > +40 °C: reduce the rated output current by 2.5 %/°C
- Use 60/75 °C or 75 °C copper wire only.

► EVF9330 ... EVF9333:
- Suitable for use on a circuit capable of delivering not more than 10000 rms symmetrical amperes, 480 V maximum, when protected by fuses.
- Suitable for use on a circuit capable of delivering not more than 50000 rms symmetrical amperes, 480 V maximum, when protected by J, T or R class fuses.
- Maximum surrounding air temperature: 0 ... +50 °C
- > +40 °C: reduce the rated output current by 2.5 %/°C
- Use 60/75 °C or 75 °C copper wire only.

3 Technical data

Contents

3.1 General data and operating conditions 3.1-1
3.2 Open and closed loop control 3.2-1
3.3 Safety relay KSR 3.3-1
3.4 Operation with rated power (normal operation) 3.4-1
3.4.1 Rated data for 400 V mains voltage 3.4-1
3.4.2 Rated data for 480 V mains voltage 3.4-3
3.5 Operation with increased rated power 3.5-1
3.5.1 Rated data for 400 V mains voltage 3.5-1
3.6 Current characteristics 3.6-1

3.1 General data and operating conditions

General data

Conformity and approval			
Conformity			
CE	2006/95/EC	Low-Voltage Directive	
	2004/108/EG	EMC Directive	
Approval			
UL	cULus	Power Conversion Equipment (File No. E132659)	

Protection of persons and equipment			
Type of protection	EN 60529	IP20	
		IP41 in case of thermally separated installation (push-through technique) between the control cabinet (inside) and the environment.	
	NEMA 250	Protection against accidental contact in accordance with type 1	
Earth leakage current	IEC/EN 61800-5-1	> 3.5 mA	Observe regulations and safety instructions!
Insulation of control circuits	IEC/EN 61800-5-1	Safe mains isolation by double (reinforced) insulation for the terminals X1 and X5. Basic insulation (single isolating distance) for the terminals X3, X4, X6, X8, X9, X10 and X11.	
Insulation resistance	EN 61800-5-1	< 2000 m site altitude: Overvoltage category III	
		> 2000 m site altitude: Overvoltage category II	
Protective measures		Against short circuit, earth fault (earth-fault protected during operation, limited earth-fault protection during operation), overvoltage, motor stalling, motor overtemperature (input for PTC or thermal contact)	

EMC			
Noise emission	IEC/EN 61800-3	Cable-guided, up to 10 m motor cable length with mains filter A: category C2.	
		Radiation, with mains filter A and installation in control cabinet: category C2	
Interference immunity	IEC/EN 61800-3	Category C3	

Operating conditions

Ambient conditions			
Climatic			
Storage	IEC/EN 60721-3-1	1K3 (-25 ... +55 °C)	< 6 months
		1K3 (-25 ... +40 °C)	> 6 months > 2 years: form DC bus capacitors
Transport	IEC/EN 60721-3-2	2K3 (-25 ... +70 °C)	
Operation			
EVF9321 ... EVF9326	IEC/EN 60721-3-3	3K3 (0 ... +55 °C) > +40 °C: reduce the rated output current by 2.5 %/°C.	
EVF9327 ... EVF9333		3K3 (0 ... +50 °C) > +40 °C: reduce the rated output current by 2.5 %/°C.	
Pollution	IEC/EN 61800-5-1	Degree of pollution 2	

Ambient conditions			
Site altitude		< 4000 m amsl > 1000 m amsl: reduce the rated output current by 5 %/ 1000 m.	
Mechanical			
Vibration resistance (9.81 m/s² = 1 g)	Germanischer Lloyd 5 ... 13.2 Hz	Amplitude ±1 mm 13.2 ... 100 Hz: acceleration resistant up to 0.7 g	
	IEC/EN 60068-2-6 10 ... 57 Hz	Amplitude 0.075 mm 57 ... 150 Hz: acceleration resistant up to 1 g	
Electrical			
AC-mains connection			
Max. mains voltage range		320 V - 0 % ... 528 V + 0 %	
Mains frequency		45 Hz - 0 % ... 65 Hz + 0 %	
Power system TT, TN		Operation permitted without restrictions with earthed neutral.	
Power system IT		Operation only permitted with the device variants V024 or V100. Operation permitted without restrictions with insulated neutral. Observe instructions on specific measures!	
Operation on public supply systems	EN 61000-3-2	Limitation of harmonic currents	
		Total output at the mains	Compliance with the requirements [1)]
		< 1 kW	With mains choke.
		> 1 kW	Without additional measures.
		[1)] The additional measures mentioned have the effect that solely the controllers meet the requirements of EN 61000-3-2. The machine/system manufacturer is responsible for the compliance with the requirements for the machine/system!	
DC-mains connection			
Max. mains voltage range		450 V - 0 % ... 740 V + 0 %	
Operating conditions		DC voltage must be symmetrical to PE. The controller will be destroyed when $+U_G$ or $-U_G$ are earthed.	
Motor connection			
Length of the motor cable		< 50 m	shielded
		< 100 m	unshielded
		At rated mains voltage and a switching frequency of ≤ 8 kHz without additional output filter. For compliance with EMC regulations, the permissible cable length might change.	

Mounting conditions		
Mounting place		In the control cabinet
Mounting position		Vertical
Free spaces Dimensions Weights		📖 4-1

3.2 Open and closed loop control

Field	Values	
Control methods	V/f characteristic control (linear, square), vector control	
Switching frequency	1 kHz, 2 kHz or 4 kHz	
Torque behaviour in case of vector control		
Maximum torque	1.5 × M_r for 60 s if rated motor power = rated 9300 vector power	
Setting range	to 1:10 (1 : 20 with feedback)	in the range of 6 ... 100 % f_r
Speed control without feedback		
Min. mechanical motor frequency	1 % f_r	Torque 0 ... M_N
Setting range	1 : 100	relating to f_r and M_r
Accuracy	± 0.5 % f_N	in the range of 6 ... 100 % f_N
Speed control without feedback		
Min. mechanical motor frequency	0.1 % f_N	Torque 0 ... M_N
Setting range	1 : 1000	relating to f_r and M_r
Accuracy	± 0.1 % of f_r	
Output frequency		
Field	- 300 Hz ... + 300 Hz	
Absolute resolution	0.06 Hz	
Standardised resolution	Parameter data: 0.01 %, Process data: 0.006 % (= 2^{14})	
Digital setpoint selection		
Accuracy	± 0.005 Hz (= ± 100 ppm)	
Analog setpoint selection		
Linearity	± 0.15 %	signal level: 5 V or 10 V
Temperature sensitivity	± 0.1 %	0 ... 50 °C
Offset	± 0.1 %	
Analog inputs/outputs	• 2 inputs (bipolar) • 2 outputs (bipolar)	
Digital inputs/outputs	• 6 inputs (freely assignable) • 1 input for controller inhibit • 4 outputs freely assignable) • 1 incremental encoder input (500 kHz, TTL level); Design: 9-pole Sub-D socket • 1 digital frequency input (500 kHz, TTL level or 200 kHz, HTL level); type: 9-pole Sub-D socket; can be alternatively used as incremental encoder input (200 kHz, HTL level) • 1 master frequency output (500 kHz, TTL level); Design: 9-pole Sub-D socket	
Cycle times		
Digital inputs	1 ms	
Digital outputs	1 ms	
Analog inputs	1 ms	
Analog outputs	1 ms (smoothing time: $\tau\tau$ = 2 ms)	
Operation in generator mode	Integrated brake transistor (optional)	

f_r rated motor frequency
M_r rated motor torque

3.3 Safety relay K_{SR}

Terminal	Description	Field	Values
X11/K32 X11/K31 X11/33 X11/34	Safety relay K_{SR} 1st disconnecting path	Coil voltage at +20 °C	DC 24 V (20 ... 30 V)
		Coil resistance at +20 °C	823 Ω ±10 %
		Rated coil power	Approx. 700 mW
		Max. switching voltage	AC 250 V, DC 250 V (0.45 A)
		Max. AC switching capacity	1500 VA
		Max. switching current (ohmic load)	AC 6 A (250 V), DC 6 A (50 V)
		Recommended minimum load	> 50 mW
		Max. switching rate	6 switchings per minute
		Mechanical service life	10^7 switching cycles
		Electrical service life	
		at 250 V AC (ohmic load)	10^5 switching cycles at 6 A 10^6 switching cycles at 1 A 10^7 switching cycles at 0.25 A
		at 24 V DC (ohmic load)	6×10^3 switching cycles at 6 A 10^6 switching cycles at 3 A 1.5×10^6 switching cycles at 1 A 10^7 switching cycles at 0.1 A

3.4 Operation with rated power (normal operation)

Note!
The controllers EVF9324, EVF9326 and EVF9328 ... EVF9333 may only be operated with the prescribed mains chokes and mains filters.

3.4.1 Rated data for 400 V mains voltage

Basis of the data			
		Voltage	Frequency
AC mains connection	[V_{rated}]	3/PE AC 320 V - 0 % ... 440 V + 0 %	45 Hz - 0 % ... 65 Hz + 0 %
DC-mains connection (alternatively)	[U_{DC}]	DC 450 V - 0 % ... 620 V + 0 %	–
Output voltage			
With mains choke		3 ~ 0 approx. 94 % V_{rated}	–
Without mains choke		3 ~ 0 ... U_N	–

9300	Mains current 1)		Typical motor power		Output power			Power loss
	With Mains choke	Without Mains choke	ASM (4-pole)		2/4 kHz 2) U, V, W	8 kHz 2) U, V, W	$+U_G$, $-U_G$ 3)	
Type	I_r [A]	I_r [A]	P_{rated} [kW]	P_{rated} [hp]	S_{rated} [kVA]	S_{rated} [kVA]	P_{DC} [kW]	P_{loss} [W]
EVF9321-xV	1.5	2.1	0.37	0.5	1.0	1.0	1.9	50
EVF9322-xV	2.5	3.5	0.75	1.0	1.7	1.7	0.7	65
EVF9323-xV	3.9	5.5	1.5	2.0	2.7	2.7	0	100
EVF9324-xV	7.0	–	3.0	4.0	4.8	4.8	2.0	150
EVF9325-xV	12.0	16.8	5.5	7.5	9.0	9.0	0	210
EVF9326-xV	20.5	–	11.0	15.0	16.3	16.3	0	390
EVF9327-xV	29.0	43.5	15.0	20.0	22.2	22.2	10.2	430
EVF9328-xV	42.0	–	22.0	30.0	32.6	32.6	4.0	640
EVF9329-xV	55.0	–	30.0	40.0	41.6	41.6	0	810
EVF9330-xV	80.0	–	45.0	60.0	61.7	61.7	5.1	1100
EVF9331-xV	100	–	55.0	75.0	76.2	76.2	0	1470
EVF9332-xV	135	–	75.0	100	103.9	103.9	28.1	1960
EVF9333-xV	165	–	90.0	125	131.2	124.7	40.6	2400

1) Mains currents at a switching frequency of 8 kHz
2) Switching frequency of the inverter
3) Power supplied by the DC bus when operating with power-adapted motor

9300	Rated output current at switching frequency					Max. permissible output current at switching frequency [1]				
	2/4 kHz [3]	8 kHz	8 kHz sin	8/2 kHz [2]	16 kHz	2/4 kHz	8 kHz	8 kHz sin	8/2 kHz [2]	16 kHz
Type	I_r [A]	I_r [A]	I_r [A]	I_r [A]	I_r [A]	I_{max} [A]	I_{max} [A]	I_{max} [A]	I_{max} [A]	I_{max} [A]
EVF9321-xV	1.5	1.5	1.5	**1.5**	1.1	2.2	2.2	2.2	**2.2**	1.6
EVF9322-xV	2.5	2.5	2.5	**2.5**	1.8	3.7	3.7	3.7	**3.7**	2.7
EVF9323-xV	3.9	3.9	3.9	**3.9**	2.9	5.8	5.8	5.8	**5.8**	4.3
EVF9324-xV	7.0	7.0	7.0	**7.0**	5.2	10.5	10.5	10.5	**10.5**	1.8
EVF9325-xV	13.0	13.0	13.0	**13.0**	9.7	19.5	19.5	19.5	**19.5**	14.5
EVF9326-xV	23.5	23.5	23.5	**23.5**	15.2	35.0	35.0	35.0	**35.0**	22.9
EVF9327-xV	32.0	32.0	29.0	**32.0**	21.0	48.0	48.0	43.0	**48.0**	31.0
EVF9328-xV	47.0	47.0	43.0	**47.0**	30.0	70.5	70.5	64.0	**70.5**	46.0
EVF9329-xV	59.0	59.0	47.0	**59.0**	35.0	89.0	89.0	70.0	**89.0**	53.0
EVF9330-xV	89.0	89.0	59.0	**89.0**	46.0	134	134	88.0	**134**	69.0
EVF9331-xV	110	110	76.0	**110**	52.0	165	165	114	**165**	165
EVF9332-xV	150	147	92.0	**150**	58.0	225	221	138	**225**	87.0
EVF9333-xV	180	147	100	**180**	63.0	270	221	150	**270**	94.0

Bold print = Lenze setting

1) The currents apply to a periodic load change with an overcurrent time of maximally 1 minute and a base load time of 2 minutes with maximally 75 % I_{rated}

2) Power-optimised operation with automatic switching frequency reduction. When the max. permissible output current is exceeded, the switching frequency is reduced to 2 kHz.

3) Possible for some types in case of other operating conditions: Operation with increased rated output current at the same load change (see chapter ”Operation with increased rated power”)

3.4.2 Rated data for 480 V mains voltage

Basis of the data			
		Voltage	Frequency
AC mains connection	[U_N]	3/PE AC 384 V - 0 % ... 528 V + 0 %	45 Hz - 0 % ... 65 Hz + 0 %
DC-mains connection (alternatively)	[U_{DC}]	DC 540 V - 0 % ... 740 V + 0 %	–
Output voltage			
With mains choke		3 ~ 0 approx. 94 % V_{rated}	–
Without mains choke		3 ~ 0 ... U_N	–

9300	Mains current [1]		Typical motor power		Output power			Power loss
	With Mains choke	Without Mains choke	ASM (4-pole)		2/4 kHz [2] U, V, W	8 kHz [2] U, V, W	$+U_G$, $-U_G$ [3]	
Type	I_r [A]	I_r [A]	P_{rated} [kW]	P_{rated} [hp]	S_{rated} [kVA]	S_{rated} [kVA]	P_{DC} [kW]	P_{loss} [W]
EVF9321-xV	1.5	2.1	0.37	0.5	1.2	1.2	2.3	50
EVF9322-xV	2.5	3.5	0.75	1.0	2.1	2.1	0.9	65
EVF9323-xV	3.9	5.5	1.5	2.0	3.2	3.2	0	100
EVF9324-xV	7.0	–	3.0	4.0	5.8	5.8	2.5	150
EVF9325-xV	12.0	16.8	5.5	7.5	10.8	10.8	0	210
EVF9326-xV	20.5	–	11.0	15.0	18.5	18.5	0	390
EVF9327-xV	29.0	43.5	18.5	25.0	26.6	26.6	11.8	430
EVF9328-xV	42.0	–	30.0	40.0	39.1	39.1	4.6	640
EVF9329-xV	55.0	–	37.0	50.0	49.9	49.9	0	810
EVF9330-xV	80.0	–	55.0	75.0	69.8	69.8	5.9	1100
EVF9331-xV	100	–	75.0	100	91.4	91.4	0	1470
EVF9332-xV	135	–	90.0	125	124	124	32.4	1960
EVF9333-xV	165	–	110.0	150	158.2	149	47.1	2400

1) Mains currents at a switching frequency of 8 kHz
2) Switching frequency of the inverter
3) Power supplied by the DC bus when operating with power-adapted motor

9300	Rated output current at switching frequency					Max. permissible output current at switching frequency [1]				
	2/4 kHz	8 kHz	8 kHz sin	8/2 kHz [2]	16 kHz	2/4 kHz	8 kHz	8 kHz sin	8/2 kHz [2]	16 kHz
Type	I_r [A]	I_r [A]	I_r [A]	I_r [A]	I_r [A]	I_{max} [A]	I_{max} [A]	I_{max} [A]	I_{max} [A]	I_{max} [A]
EVF9321-xV	1.5	1.5	1.5	**1.5**	1.1	2.2	2.2	2.2	**2.2**	1.6
EVF9322-xV	2.5	2.5	2.5	**2.5**	1.8	3.7	3.7	3.7	**3.7**	2.7
EVF9323-xV	3.9	3.9	3.9	**3.9**	2.9	5.8	5.8	5.8	**5.8**	4.3
EVF9324-xV	7.0	7.0	7.0	**7.0**	5.2	10.5	10.5	10.5	**10.5**	7.8
EVF9325-xV	13.0	13.0	13.0	**13.0**	9.7	19.5	19.5	19.5	**19.5**	14.5
EVF9326-xV	22.3	22.3	22.3	**22.3**	14.6	33.5	33.5	33.5	**33.5**	21.8
EVF9327-xV	30.4	30.4	27.0	**30.4**	19.0	45.6	45.6	41.0	**45.6**	29.0
EVF9328-xV	44.7	44.7	41.0	**44.7**	29.0	67.0	67.0	61.0	**67.0**	43.5
EVF9329-xV	56.0	56.0	44.0	**560**	33.0	84.0	84.0	66.0	**84.0**	49.0
EVF9330-xV	84.0	84.0	55.0	**84.0**	43.7	126	126	82.0	**126**	65.6
EVF9331-xV	105	105	71.0	**105**	49.5	157	157	107	**157**	74.0
EVF9332-xV	142	142	87.0	**142**	55.0	213	213	130	**213**	83.0
EVF9333-xV	171	171	94.0	**171**	59.0	256	211	141	**256**	89.0

Bold print = Lenze setting

1) The currents apply to a periodic load change with an overcurrent time of maximally 1 minute and a base load time of 2 minutes with maximally 75 % I_{rated}

2) Power-optimised operation with automatic switching frequency reduction. When the max. permissible output current is exceeded, the switching frequency is reduced to 2 kHz.

3.5 Operation with increased rated power

Under the operating conditions described here, the drive controller can be operated in continuous operation with a more powerful motor. The overload capacity is reduced to 120 %.

Typical applications are pumps with quadratic load characteristic or fan.

Note!

► The operation with increased rated power is not UL-certified.

► Operation with increased rated power is only allowed:
- In the listed mains voltage range
- With the listed switching frequencies
- With the specified fuses, cable cross-sections and mains chokes or mains filters

3.5.1 Rated data for 400 V mains voltage

Basis of the data			
		Voltage	Frequency
AC mains connection	[U_N]	3/PE AC 320 V - 0 % ... 440 V + 0 %	45 Hz - 0 % ... 65 Hz + 0 %
DC-mains connection (alternatively)	[U_{DC}]	DC 450 V - 0 % ... 620 V + 0 %	–
Output voltage			
With mains choke		3 ~ 0 approx. 94 % V_{rated}	–

9300	Mains current [1]	Typical motor power		Output power		Power loss
		ASM (4-pole)		2/4 kHz [2] U, V, W	$+U_G$, $-U_G$ [3]	
Type	I_r [A]	P_{rated} [kW]	P_{rated} [hp]	S_{rated} [kVA]	P_{DC} [kW]	P_{loss} [W]
EVF9321-xV	1.7	0.55	0.75	1.3	1.72	50
EVF9322-xV	2.8	1.1	1.5	2.1	0.35	65
EVF9323-xV	5.0	2.2	3.0	3.8	0	115
EVF9324-xV	8.8	4.0	5.0	6.5	1.0	165
EVF9325-xV	15.0	7.5	10.0	11.1	0	260
EVF9327-xV	39.0	22.0	30.0	29.8	3.2	640
EVF9328-xV	50.0	30.0	40.0	39.5	0	810
EVF9329-xV	60.0	37.0	50.0	46.4	0	950
EVF9330-xV	97.0	55.0	75.0	74.8	0	1350
EVF9331-xV	119	75.0	100	91.5	0	1470
EVF9332-xV	144	90.0	125	110	13.1	2100
EVF9333-xV	185	110.0	150	142	20.6	2400

1) Mains currents at a switching frequency of 2/4 kHz
2) Switching frequency of the inverter
3) Power supplied by the DC bus when operating with power-adapted motor

9300	Rated output current at switching frequency		Max. permissible output current at switching frequency [1]	
	2/4 kHz	2/8 kHz [2]	2/4 kHz	2/8 kHz [2]
Type	I_r [A]	I_r [A]	I_{max} [A]	I_{max} [A]
EVF9321-xV	1.8	**1.8**	2.2	**2.2**
EVF9322-xV	3.0	**3.0**	3.7	**3.7**
EVF9323-xV	5.5	**5.5**	5.8	**5.8**
EVF9324-xV	9.2	**9.2**	10.5	**10.5**
EVF9325-xV	15.0	**15.0**	19.5	**19.5**
EVF9327-xV	43.0	**43.0**	48.0	**48.0**
EVF9328-xV	56.0	**56.0**	70.5	**70.5**
EVF9329-xV	66.0	**66.0**	89.0	**89.0**
EVF9330-xV	100	**100**	134	**134**
EVF9331-xV	135	**135**	165	**165**
EVF9332-xV	159	**159**	225	**225**
EVF9333-xV	205	**205**	270	**270**

Bold print = Lenze setting

1) The currents apply to a periodic load change with an overcurrent time of maximally 1 minute and a base load time of 2 minutes with maximally 75 % I_{rated}

2) Power-optimised operation with automatic switching frequency reduction. During operation with increased rated power, the switching frequency is reduced to 2 kHz.

3.6 Current characteristics

On some operating conditions, the maximum output current is limited for the devices EVF9326 ... EVF9333:

► For output frequencies f_{out} < |5 Hz| and a heatsink temperature ϑ_K > 40° C.

► The current limitation depends on the chopper frequency.

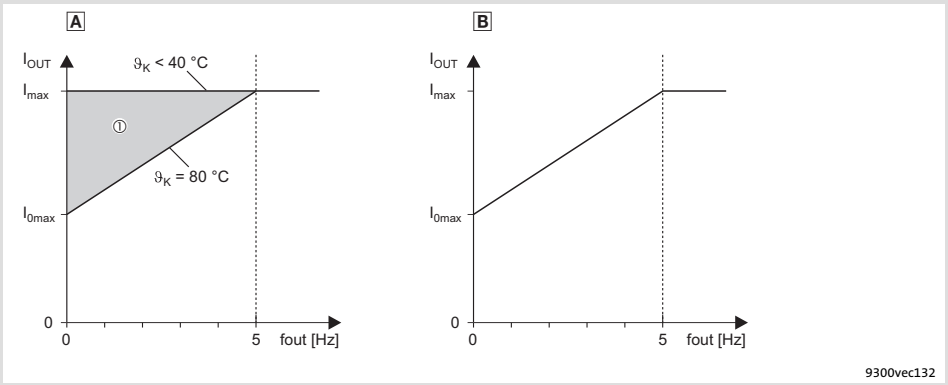

Fig. 3.6-1 Current derating characteristics

A Operation with chopper frequency f_{chop} = 16/8/2 kHz, 2 kHz, 4 kHz, 8 kHz or 8/2 kHz (C0018 = 0, 1, 2, 3, 4, 6)
The current limitation follows the characteristic
At output frequencies f_{out} < |5 Hz| and heatsink temperatures ϑ_K = 40 ... 80 °C the current limit is adjusted steplessly in the range ①.

B Operation with chopper frequency f_{chop} = 16 kHz (C0018 = 5)
The current limitation follows the characteristic and does not depend on the heatsink temperature

9300 vector	I_{0max} [A] 1)						I_{0max} [A] 2)	
	C0018 = 0, 1, 2, 6		C0018 = 3		C0018 = 4		C0018 = 5	
	U_{mains}		U_{mains}		U_{mains}		U_{mains}	
	400 V	480 V	400 V	480 V	400 V	480 V	400 V	480 V
EVF9326	35.0	21.6	21.6	32.0	22.7	21.6	11.2	10.6
EVF9327	48.0	45.6	32.0	32.0	28.8	27.3	11.2	10.6
EVF9328	70.5	67.0	47.0	47.0	42.3	40.2	16.5	15.6
EVF9329	89.0	84.6	59.3	59.3	53.4	50.7	17.8	16.9
EVF9330	134	125	89.4	89.4	80.4	76.3	22.0	22.0
EVF9331	143	135	115	115	103	98.8	22.0	22.0
EVF9332	194	185	157	157	138	131	30.0	30.0
EVF9333	197	188	158	158	142	135	35.9	35.9

1) Maximum available output current at an output frequency f_{out} = |0 Hz| and heatsink temperature ϑ_K = 80 °C

2) Maximum available output current at an output frequency f_{out} = |0 Hz|

4 Installation of the standard device

Contents

4.1 Standard devices in the power range 0.37 ... 11 kW 4.1-1
4.1.1 Important notes 4.1-1
4.1.2 Mounting with fixing rails (standard) 4.1-2
4.1.3 Thermally separated mounting (push-through technique) . 4.1-3
4.1.4 Mounting in ”cold plate” technique 4.1-4
4.2 Standard devices in the power range 15 ... 30 kW 4.2-1
4.2.1 Important notes 4.2-1
4.2.2 Mounting with fixing brackets (standard) 4.2-2
4.2.3 Thermally separated mounting (push-through technique) . 4.2-3
4.2.4 Mounting in ”cold plate” technique 4.2-4
4.3 Standard devices with a power of 45 kW 4.3-1
4.3.1 Important notes 4.3-1
4.3.2 Mounting with fixing brackets (standard) 4.3-2
4.3.3 Thermally separated mounting (push-through technique) . 4.3-3
4.4 Standard devices in the power range of 55 kW 4.4-1
4.4.1 Important notes 4.4-1
4.4.2 Mounting with fixing brackets (standard) 4.4-2
4.4.3 Thermally separated mounting (push-through technique) . 4.4-3
4.4.4 Modification of the fan module for push-through technique 4.4-4
4.5 Standard devices in the power range 75 ... 90 kW 4.5-1
4.5.1 Important notes 4.5-1
4.5.2 Mounting with fixing brackets (standard) 4.5-2
4.5.3 Thermally separated mounting (push-through technique) . 4.5-3

4.1 Standard devices in the power range 0.37 ... 11 kW

4.1.1 Important notes

Mass of the devices

9300	Standard device	”Cold plate” device
Type	EVF93xx-**E**V [kg]	EVF93xx-**C**V [kg]
EVF9321-xV	4.0	3.1
EVF9322-xV	4.0	3.1
EVF9323-xV	5.5	3.9
EVF9324-xV	5.5	3.9
EVF9325-xV	7.4	5.2
EVF9326-xV	7.4	5.2

4.1.2 Mounting with fixing rails (standard)

Required mounting material from the scope of supply:

Description	Use	EVF9321 ... EVF9324	EVF9325, EVF9326
		Amount	
Fixing rails	Drive controller fixing	2	4

Dimensions

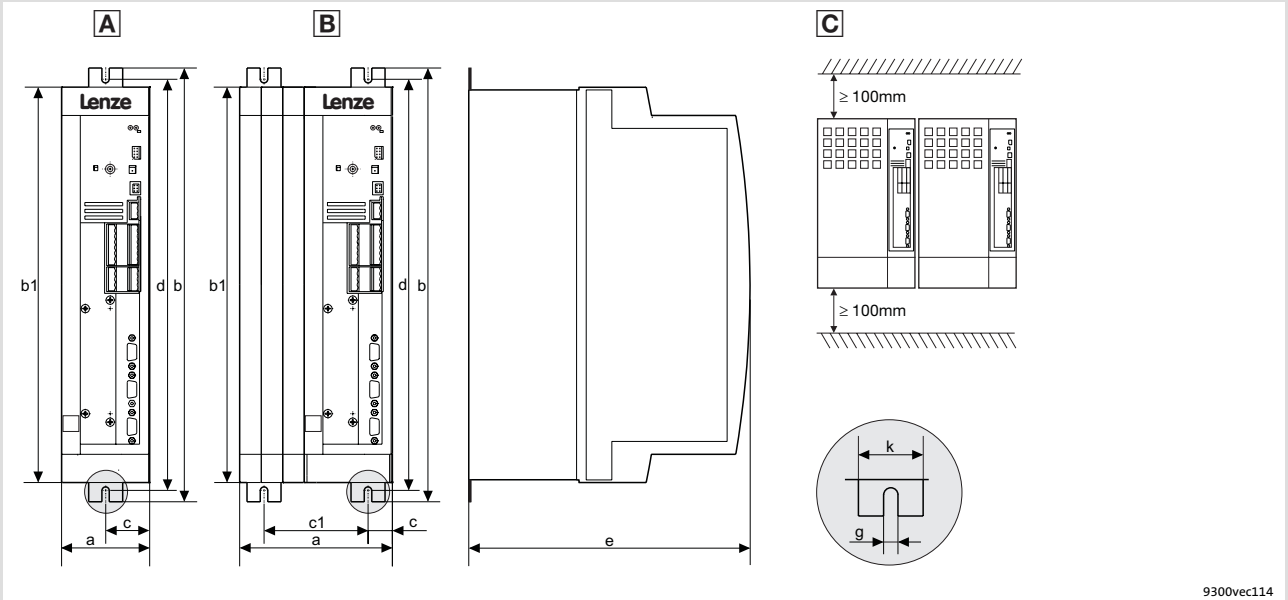

Fig. 4.1-1 Standard mounting with fixing rails 0.37 ... 11 kW

C Drive controllers can be mounted side by side without spacing

9300 vector		Dimensions [mm]									
Type		a	b	b1	c	c1	d	d1	e [1]	g	k
EVF9321-EV EVF9322-EV	A	78	384	350	39	-	365	–	250	6.5	30
EVF9323-EV EVF9324-EV	A	97	384	350	48.5	-	365	–	250	6.5	30
EVF9325-EV EVF9326-EV	B	135	384	350	21.5	92	365	–	250	6.5	30

[1] For a fieldbus module plugged onto X1, consider mounting space for connecting cables

Mounting

► Attach the fixing rails to the housing of the drive controller.

4.1.3 Thermally separated mounting (push-through technique)

For mounting in push-through technique, the drive controller of type EVF93xx-**E**V must be used. In addition, the mounting set for push-through technique is required.

Type	Mounting set	Type	Mounting set
EVF9321-EV, EVF9322-EV	EJ0036		
EVF9323-EV, EVF9324-EV	EJ0037	EVF9325-EV, EVF9326-EV	EJ0038

Dimensions

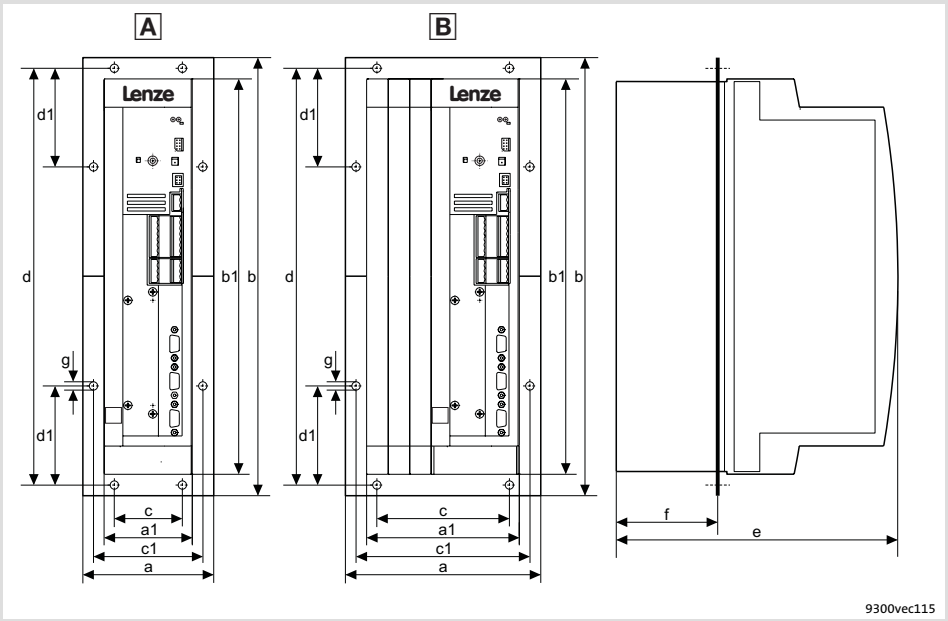

Fig. 4.1-2 Dimensions for thermally separated mounting 0.37 ... 11 kW

9300 vector		Dimensions [mm]										
Type		a	a1	b	b1	c	c1	d	d1	e [1]	f	g
EVF9321-EV EVF9322-EV	A	112.5	78	385.5	350	60	95.5	365.5	105.5	250	92	6.5
EVF9323-EV EVF9324-EV	A	131.5	97	385.5	350	79	114.5	365.5	105.5	250	92	6.5
EVF9325-EV EVF9326-EV	B	169.5	135	385.5	350	117	152.5	365.5	105.5	250	92	6.5

[1] For a fieldbus module plugged onto X1, consider mounting space for connecting cables

Mounting cutout in control cabinet

9300 vector		Dimensions [mm]	
Type		Width	Height
EVF9321-EV EVF9322-EV	A	82	350
EVF9323-EV EVF9324-EV	A	101	350
EVF9325-EV EVF9326-EV	B	139	350

4.1.4 Mounting in ”cold plate” technique

Note!

All 9300 vector frequency inverters are approved according to UL508C. To maintain the guaranteed features, controllers in ”cold plate” must be mounted by the user. For this reason, these frequency inverters have the marking UR (instead of UL).

The drive controllers can be mounted in ”cold plate” technique, e.g. on collective coolers. For this purpose, the drive controllers of type EVF93xx-**C**V must be used.

Required mounting material from the scope of supply:

Description	Use	EVF9321 EVF9322	EVF9323 EVF9324	EVF9325 EVF9326
		Quantity		
Fixing bracket	Drive controller fixing	2	2	2
Sheet metal screw 3.5 × 13 mm (DIN 7981)	Mounting of fixing bracket to the drive controller	6	6	6

Requirements for collective coolers

The following points are important for safe and reliable operation of the controller:

- ► Good thermal connection to the cooler
  - – The contact surface between the collective cooler and the controller must be at least as large as the cooling plate of the controller.
  - – Plane contact surface, max. deviation 0.05 mm.
  - – When attaching the collective cooler to the controller, make sure to use all specified screw connections.
- ► Observe the thermal resistance R_{th} given in the table. The values are valid for controller operation under rated conditions.

9300	Cooling path	
	Power to be dissipated	Heatsink - environment
Type	P_v [W]	R_{th} [K/W]
EVF9321-CV	24	1.45
EVF9322-CV	42	0.85
EVF9323-CV	61	0.57
EVF9324-CV	105	0.33
EVF9325-CV	180	0.19
EVF9326-CV	360	0.10

Ambient conditions

- ► The rated data and the derating factors at increased temperature also apply to the ambient temperature of the drive controllers.
- ► Temperature at the cooling plate of the drive controller: max. 75 °C.

Dimensions

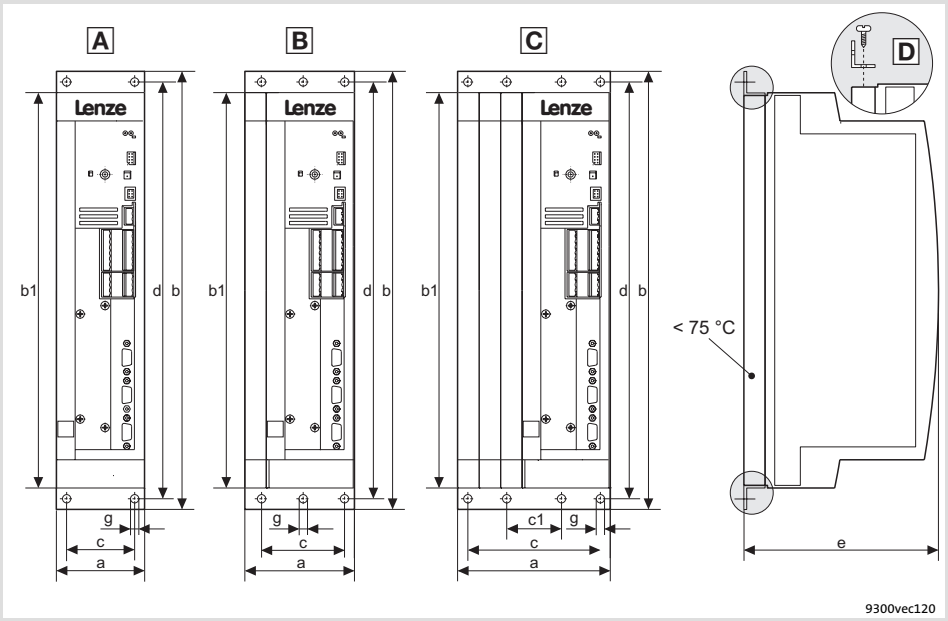

Fig. 4.1-3 Dimensions for mounting in ”cold plate” technique 0.37 ... 11 kW

9300 vector		Dimensions [mm]							
Type		a	b	b1	c	c1	d	e [1]	g
EVF9321-CVV003 EVF9322-CVV003	A	78	381	350	48	–	367	168	6.5
EVF9323-CVV003 EVF9324-CVV003	B	97	381	350	67	–	367	168	6.5
EVF9325-CVV003 EVF9326-CVV003	C	135	381	350	105	38	367	168	6.5

[1] For a fieldbus module plugged onto X1, consider mounting space for connecting cables

Mounting

Apply heat conducting paste before screwing together the cooler and cooling plate of the drive controller so that the heat transfer resistance is as low as possible.

1. Fasten the fixing bracket with sheet metal screws 3.5 × 13 mm at the top and bottom of the drive controller D.
2. Clean the contact surface of cooler and cooling plate with spirit.
3. Apply a thin coat of heat conducting paste with a filling knife or brush.
   – The heat conducting paste in the accessory kit is sufficient for an area of approx. 1000 cm^2.
4. Mount the drive controller on the cooler.

4.2 Standard devices in the power range 15 ... 30 kW

4.2.1 Important notes

The accessory kit is located inside the controller.

Remove the cover of the drive controller

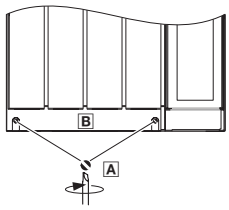

1. Remove the screws A
2. Lift cover B up and detach it

Mass of the devices

9300	Standard device	”Cold plate” device
Type	EVF93xx-**E**V [kg]	EVF93xx-**C**V [kg]
EVF9327-xV	13.5	9.5
EVF9328-xV	15.0	9.5
EVF9329-xV	15.0	–

4.2.2 Mounting with fixing brackets (standard)

Mounting material required from the scope of supply:

Description	Use	Quantity
Fixing bracket	Drive controller fixing	4
Raised countersunk head screw M5 × 10 mm (DIN 966)	Mounting of fixing bracket to the drive controller	4

Dimensions

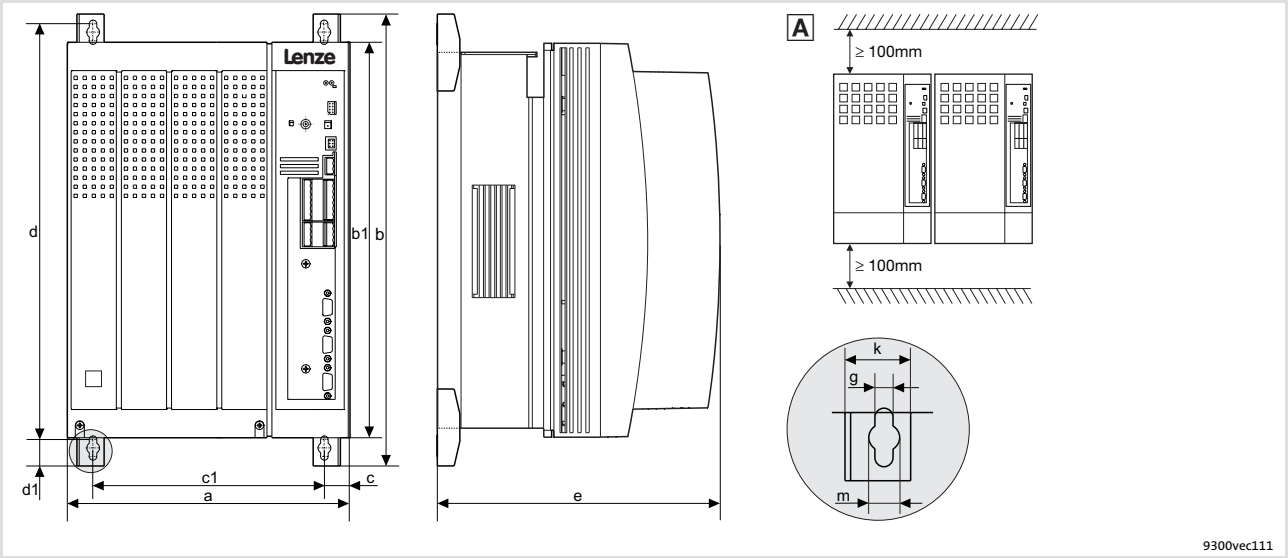

Fig. 4.2-1 Standard mounting with fixing brackets 15 ... 30 kW

A Drive controllers can be mounted side by side without spacing

9300 vector	Dimensions [mm]										
Type	a	b	b1	c	c1	d	d1	e [1]	g	k	m
EVF9327-EV EVF9328-EV EVF9329-EV	250	402	350	22	206	370	24	250	6.5	24	11

1) For a fieldbus module plugged onto X1, consider mounting space for connecting cables

Mounting

► Attach the fixing brackets to the heatsink plate of the drive controller.

4.2.3 Thermally separated mounting (push-through technique)

For mounting in push-through technique, the drive controller of type EVF93xx-**E**V must be used. In addition, the mounting set EJ0011 for push-through technique is required.

Dimensions

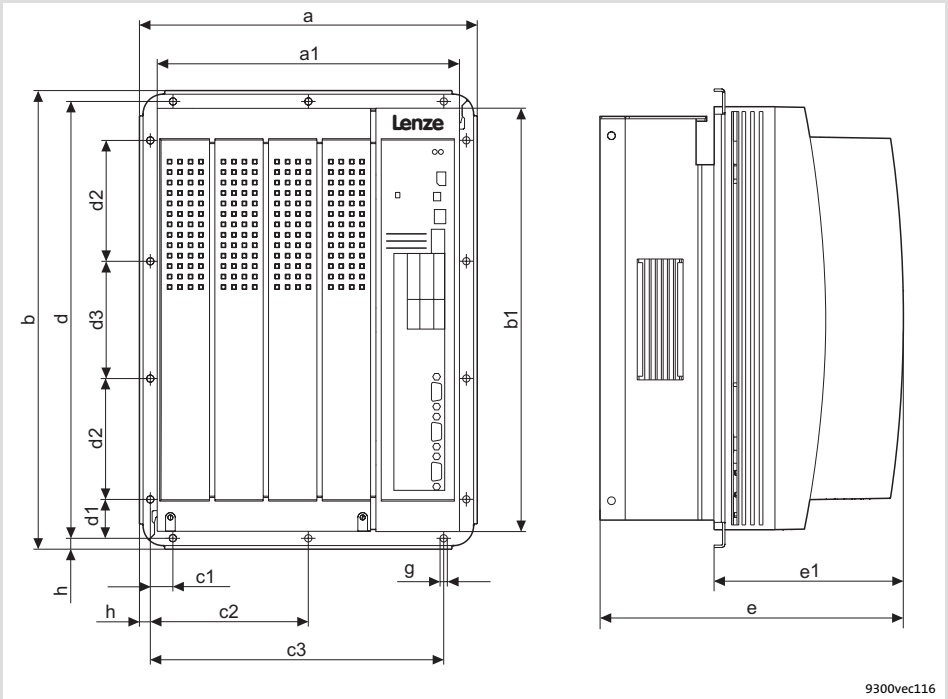

Fig. 4.2-2 Dimensions for thermally separated mounting 15 ... 30 kW

9300 vector	Dimensions [mm]														
Type	a	a1	b	b1	c1	c2	c3	d	d1	d2	d3	e [1]	e1	g	h
EVF9327-EV EVF9328-EV EVF9329-EV	279.5	250	379.5	350	19	131	243	361.5	32	100	97	250	159.5	6	9

1) For a fieldbus module plugged onto X1, consider mounting space for connecting cables

Mounting cutout in control cabinet

EVF9327-EV EVF9328-EV EVF9329-EV	236	336

4.2.4 Mounting in ”cold plate” technique

Note!

All 9300 vector frequency inverters are approved according to UL508C. To maintain the guaranteed features, controllers in ”cold plate” must be mounted by the user. For this reason, these frequency inverters have the marking UR (instead of UL).

The drive controllers can be mounted in ”cold plate” technique, e.g. on collective coolers. For this purpose, the drive controllers of type EVF93xx-**C**V must be used.

Requirements for collective coolers

The following points are important for safe and reliable operation of the controller:

► Good thermal connection to the cooler
- – The contact surface between the collective cooler and the controller must be at least as large as the cooling plate of the controller.
- – Plane contact surface, max. deviation 0.05 mm.
- – When attaching the collective cooler to the controller, make sure to use all specified screw connections.

► Observe the thermal resistance R_{th} given in the table. The values are valid for controller operation under rated conditions.

9300	Cooling path	
	Power to be dissipated	Heatsink - environment
Type	P_v [W]	R_{th} [K/W]
EVF9327-CV	410	0.085
EVF9328-CV	610	0.057

Ambient conditions

► The rated data and the derating factors at increased temperature also apply to the ambient temperature of the drive controllers.

► Temperature at the cooling plate of the drive controller: max. 75 °C.

Dimensions

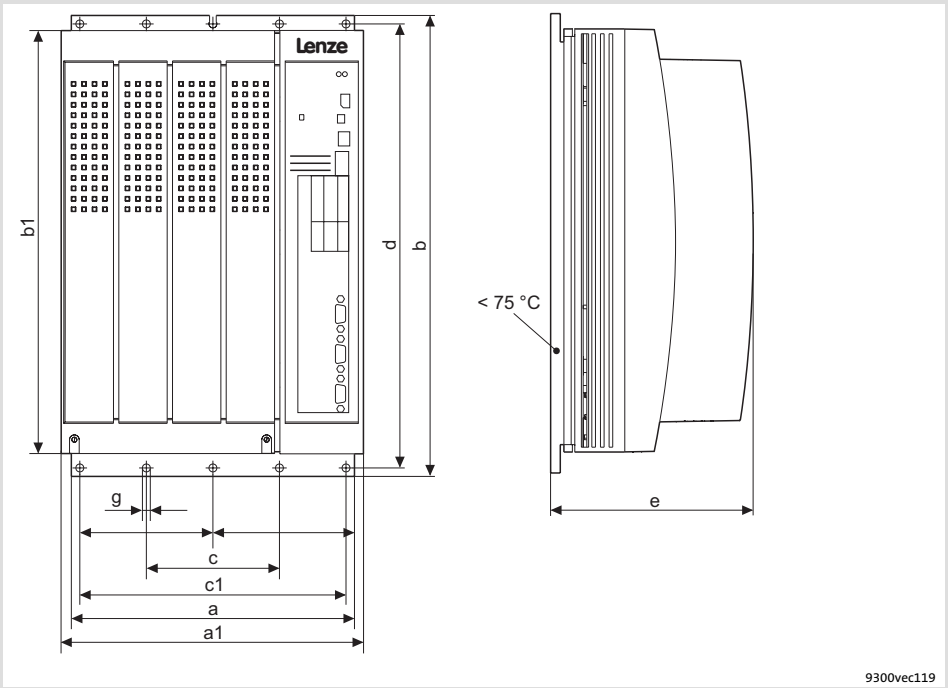

Fig. 4.2-3 Dimensions for mounting in ”cold plate” technique 15 ... 22 kW

9300 vector	Dimensions [mm]								
Type	a	a1	b	b1	c	c1	d	e [1]	g
EVF9327-CVV003 EVF9328-CVV003	234	250	381	350	110	220	367	171	6.5

[1] For a fieldbus module plugged onto X1, consider mounting space for connecting cables

Mounting

Apply heat conducting paste before screwing together the cooler and cooling plate of the drive controller so that the heat transfer resistance is as low as possible.

1. Clean the contact surface of cooler and cooling plate with spirit.
2. Apply a thin coat of heat conducting paste with a filling knife or brush.
   – The heat conducting paste in the accessory kit is sufficient for an area of approx. 1000 cm^2.
3. Mount the drive controller on the cooler.

4.3 Standard devices with a power of 45 kW

4.3.1 Important notes

The accessory kit is located inside the controller.

Remove the cover of the drive controller	
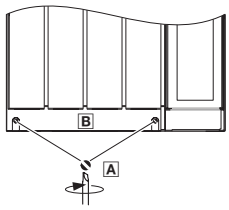	1. Remove the screws A 2. Lift cover B up and detach it

Mass of the devices

9300	Standard device	”Cold plate” device
Type	EVF93xx-**E**V [kg]	EVF93xx-**C**V [kg]
EVF9330-xV	36.0	–

4.3.2 Mounting with fixing brackets (standard)

Mounting material required from the scope of supply:

Description	Use	Quantity
Fixing bracket	Drive controller fixing	4
Hexagon head cap screw M8 × 16 mm (DIN 933)	Mounting of fixing bracket to the drive controller	4
Washer ∅ 8.4 mm (DIN 125)	For hexagon head cap screw	4
Spring washer ∅ 8 mm (DIN 127)	For hexagon head cap screw	4

Dimensions

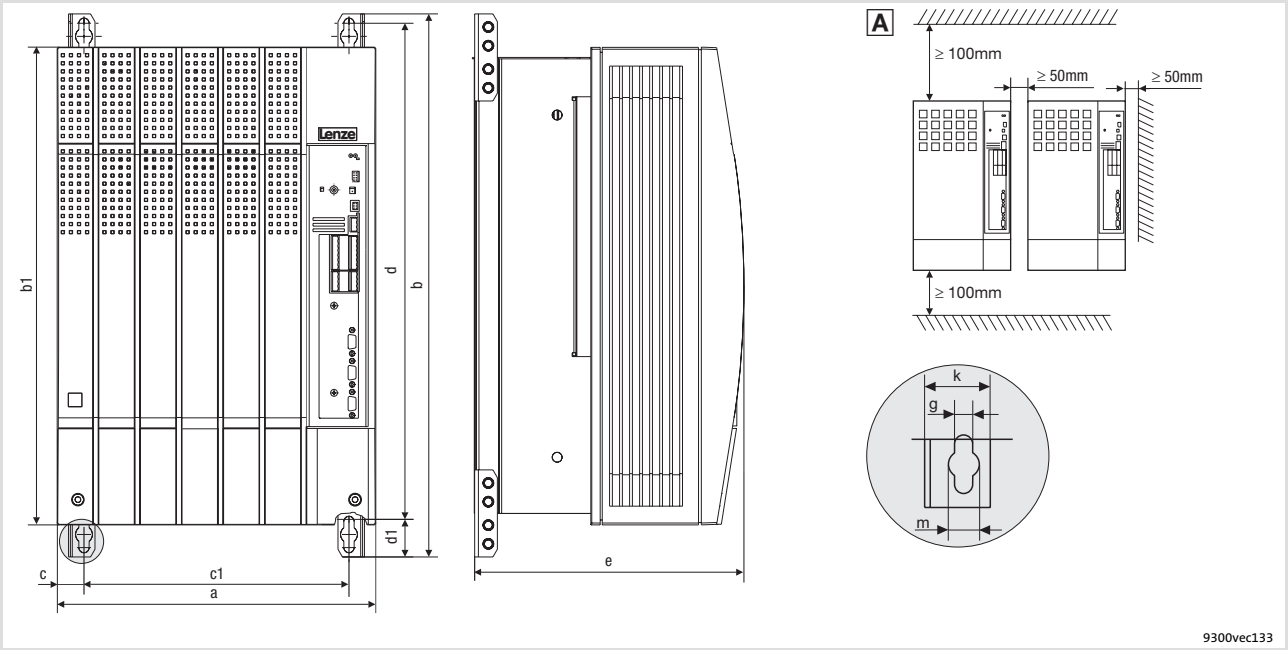

Fig. 4.3-1 Standard mounting with fixing brackets 45 kW

A Arrange drive controllers in a row with spacing to be able to remove eye bolts

9300 vector	Dimensions [mm]										
Type	a	b	b1	c	c1	d	d1	e [1]	g	k	m
EVF9330-EV	340	580	510	28.5	283	532	38	285	11	28	18

1) For a fieldbus module plugged onto X1, consider mounting space for connecting cables

Mounting

► Attach the fixing brackets to the heatsink plate of the drive controller.

4.3.3 Thermally separated mounting (push-through technique)

For mounting in push-through technique, the drive controller of type EVF93xx-**E**V must be used. In addition, the mounting set EJ0010 for push-through technique is required.

Dimensions

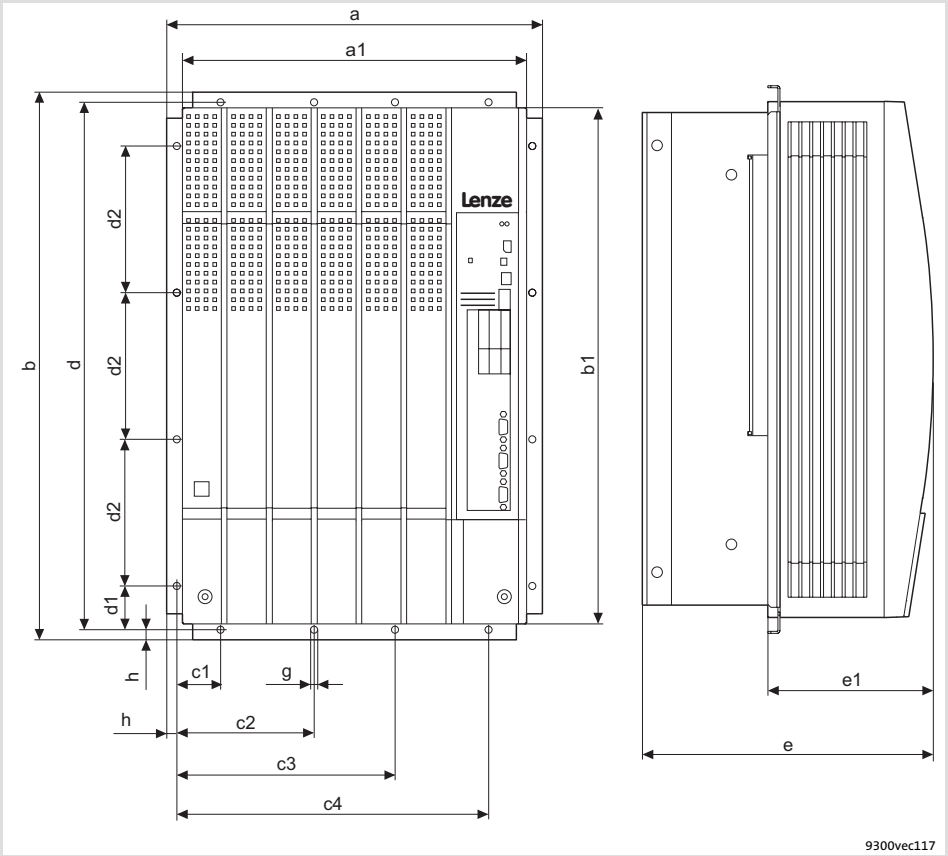

Fig. 4.3-2 Dimensions for thermally separated mounting 45 kW

9300 vector	Dimensions [mm]														
Type	a	a1	b	b1	c1	c2	c3	c4	d	d1	d2	e [1]	e1	g	h
EVF9330-EV	373	340	543	510	45	137.5	217.5	310	525	45	145	285	163.5	7	9

[1] For a fieldbus module plugged onto X1, consider mounting space for connecting cables

Mounting cutout in control cabinet

9300 vector	Dimensions [mm]	
Type	Width	Height
EVF9330-EV	320	492

4.4 Standard devices in the power range of 55 kW

4.4.1 Important notes

The accessory kit is located inside the controller.

Remove the cover of the drive controller	
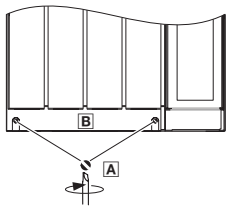	1. Remove the screws A 2. Lift cover B up and detach it

Mass of the devices

9300	Standard device	”Cold plate” device
Type	EVF93xx-**E**V [kg]	EVF93xx-**C**V [kg]
EVF9331-xV	38.0	–

4.4.2 Mounting with fixing brackets (standard)

Mounting material required from the scope of supply:

Description	Use	Quantity
Fixing bracket	Drive controller fixing	4
Hexagon head cap screw M8 × 16 mm (DIN 933)	Mounting of fixing bracket to the drive controller	4
Washer ∅ 8.4 mm (DIN 125)	For hexagon head cap screw	4
Spring washer ∅ 8 mm (DIN 127)	For hexagon head cap screw	4

Dimensions

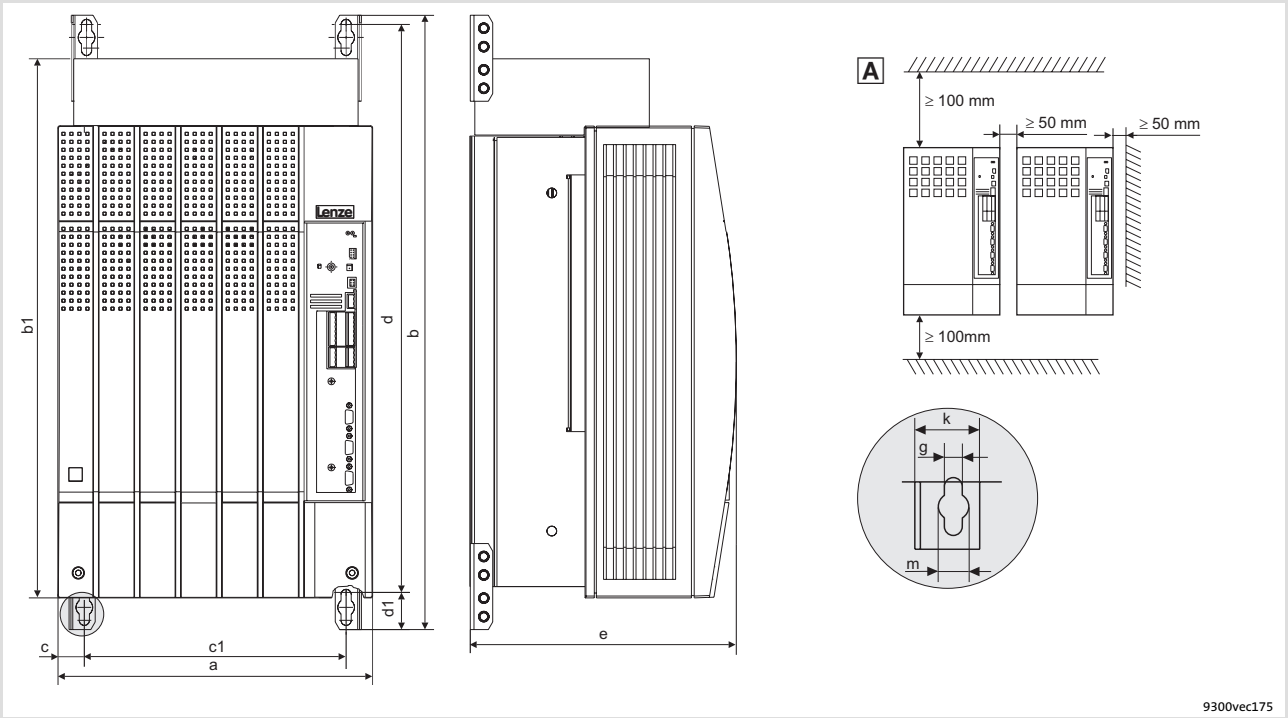

Fig. 4.4-1 Standard mounting with fixing brackets 55 kW

A Arrange drive controllers in a row with spacing to be able to remove eye bolts

9300 vector	Dimensions [mm]										
Type	a	b	b1	c	c1	d	d1	e [1]	g	k	m
EVF9331-EV	340	672	591	28.5	283	615	38	285	11	28	18

[1] For a fieldbus module plugged onto X1, consider mounting space for connecting cables

Mounting

► Attach the fixing brackets to the heatsink plate of the drive controller.

4.4.3 Thermally separated mounting (push-through technique)

For mounting in push-through technique, the drive controller of type EVF93xx-**E**V must be used. In addition, the mounting set EJ0010 for push-through technique is required.

► For thermally separated mounting you have to modify the fan module. (📖 4.4-4)

Dimensions

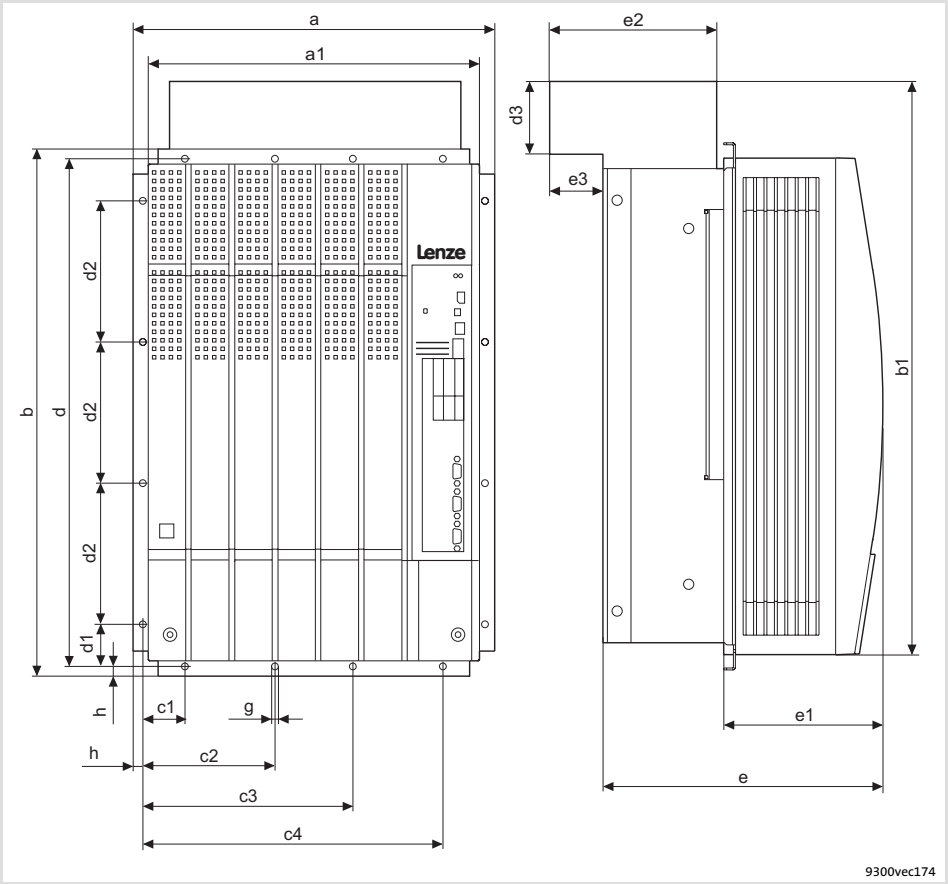

Fig. 4.4-2 Dimensions for thermally separated mounting 55 kW

9300 vector	Dimensions [mm]																	
Type	a	a1	b	b1	c1	c2	c3	c4	d	d1	d2	d3	e [1]	e1	e2	e3	g	h
EVF9331-EV	373	340	543	591	45	137.5	217.5	310	525	45	145	81	285	163.5	185	66	7	9

[1] For a fieldbus module plugged onto X1, consider mounting space for connecting cables

Mounting cutout in control cabinet

9300 vector	Dimensions [mm]	
Type	Width	Height
EVF9331-EV	320	515

4.4.4 Modification of the fan module for push-through technique

For thermally separated mounting the fan module has to be rotated by 180° so that the controller fits into the mounting cutout.

Removing the fan module

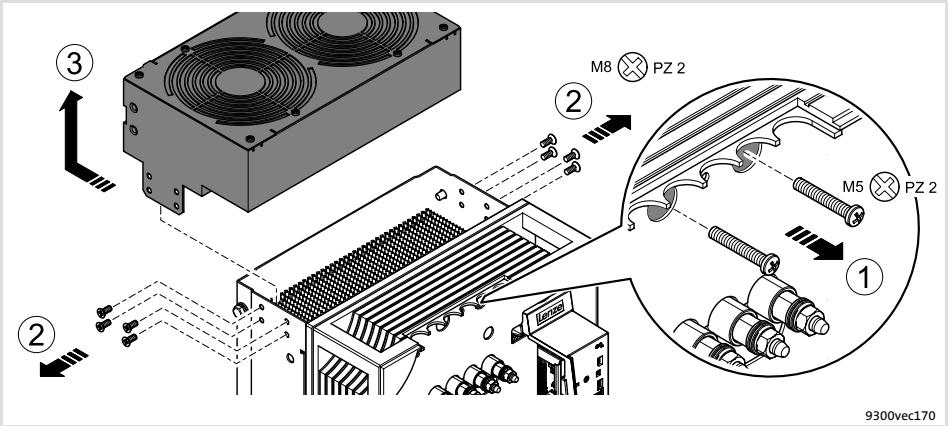

Fig. 4.4-3 Removing the fan module from the controller

1. Remove both screws.
   The screws connect the fans to the supply voltage.
2. Remove the 4 screws for fixing the fan module on each side.
3. Pull back the fan module and carefully remove it to the top.
   Make sure that the threaded sleeves do not touch the housing edge. They may break off.

Modifying the threaded sleeves on the fan module

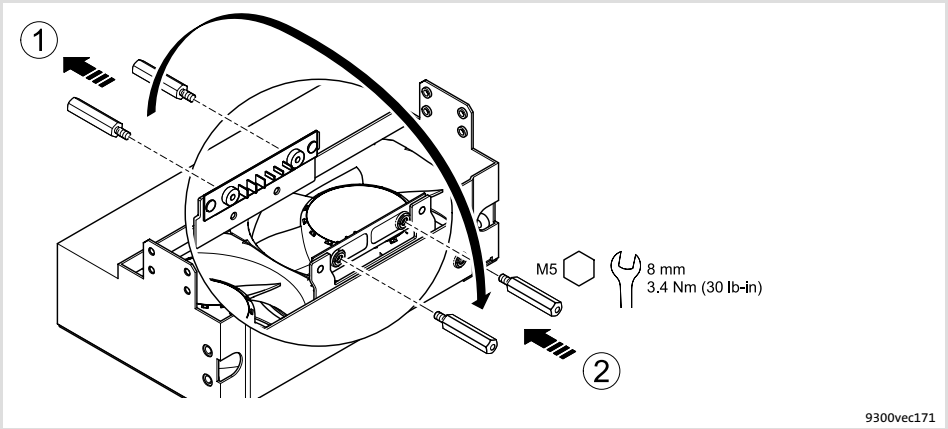

Fig. 4.4-4 Modifying the threaded sleeves for the voltage supply of the fans

1. Remove the threaded sleeves.
2. Screw-in the threaded sleeves on the opposite side and fasten them.

Plugging the fan connecting cable to another terminal on the fan module

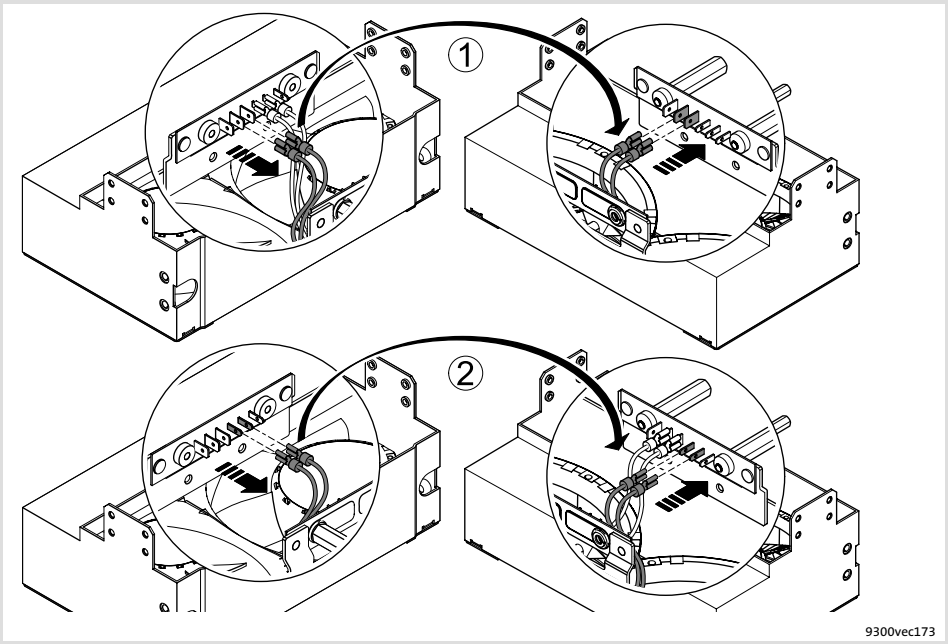

Fig. 4.4-5 Plugging the fan connecting cable for the voltage supply to another terminal

1. Remove the cable lugs of the two red connecting cables and plug them in again on the diagonally arranged side.
2. Remove the cable lugs of the two blue connecting cables and plug them in again on the diagonally arranged side.

Mounting the fan module in a manner rotated by 180°

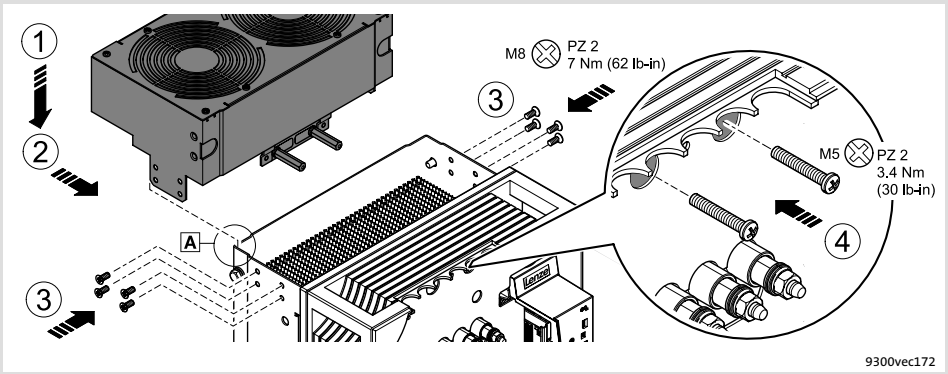

Fig. 4.4-6 Mounting the fan module on the controller

1. Place the fan module onto the controller. Insert the lugs at the back into the base plate A.

   Make sure that the threaded sleeves do not touch the housing edge. They may break off.
2. Push the fan module to the front.
3. Screw-in and fasten the 4 screws for fixing the fan module on each side.
4. Screw-in and fasten the two screws for the supply voltage.

4.5 Standard devices in the power range 75 ... 90 kW

4.5.1 Important notes

The accessory kit is located inside the controller.

Remove the cover of the drive controller	
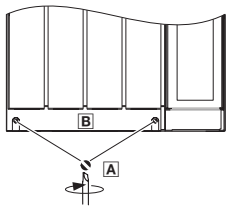	1. Remove the screws A 2. Lift cover B up and detach it

Mass of the devices

9300	Standard device	”Cold plate” device
Type	EVF93xx-**E**V [kg]	EVF93xx-**C**V [kg]
EVF9332-xV	59.0	–
EVF9333-xV	59.0	–

4.5.2 Mounting with fixing brackets (standard)

Mounting material required from the scope of supply:

Description	Use	Quantity
Fixing bracket	Drive controller fixing	4
Hexagon head cap screw M8 × 16 mm (DIN 933)	For fixing bracket	8
Washer ∅ 8.4 mm (DIN 125)	For hexagon head cap screw	8
Spring washer ∅ 8 mm (DIN 127)	For hexagon head cap screw	8

Dimensions

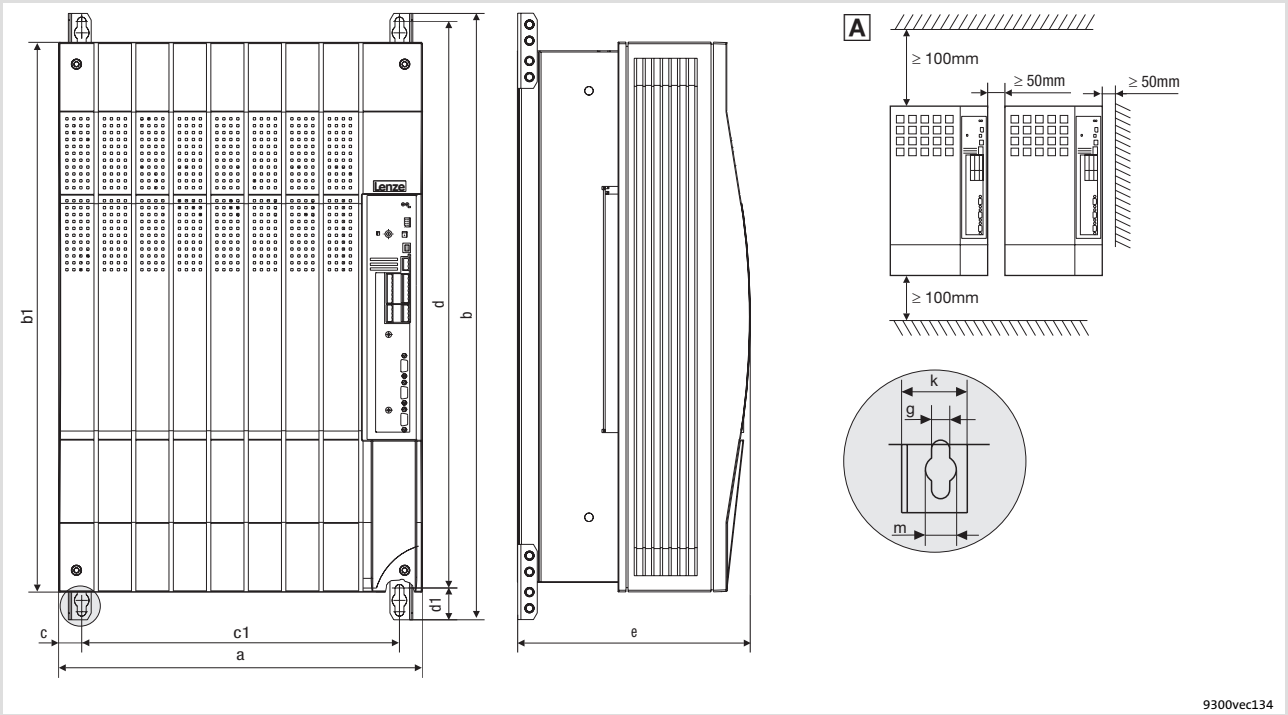

Fig. 4.5-1 Standard mounting with fixing brackets 75 ... 90 kW

A Drive controllers can be mounted side by side without spacing

9300 vector	Dimensions [mm]										
Type	a	b	b1	c	c1	d	d1	e [1]	g	k	m
EVF9332-EV EVF9333-EV	450	750	680	28.5	393	702	38	285	11	28	18

[1] For a fieldbus module plugged onto X1, consider mounting space for connecting cables

Mounting

► Attach the fixing brackets to the heatsink plate of the drive controller.

4.5.3 Thermally separated mounting (push-through technique)

For mounting in push-through technique, the drive controller of type EVF93xx-**E**V must be used. In addition, the mounting set EJ0009 for push-through technique is required.

Dimensions

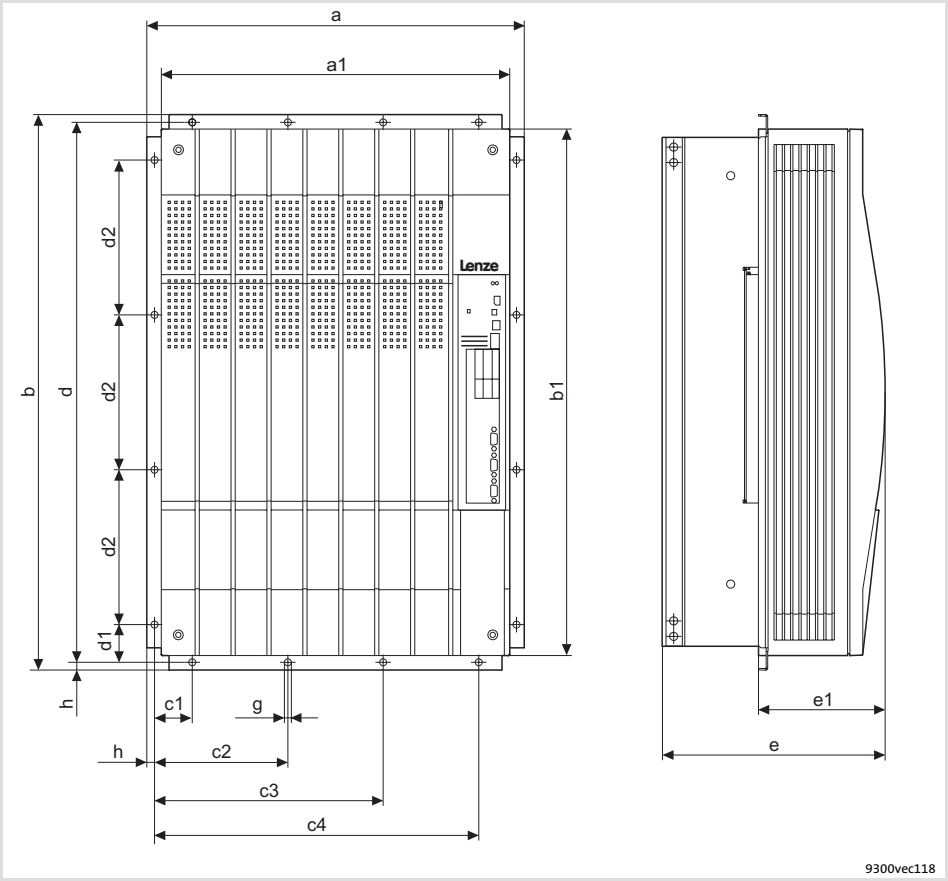

Fig. 4.5-2 Dimensions for thermally separated mounting 75 ... 90 kW

9300 vector	Dimensions [mm]														
Type	a	a1	b	b1	c1	c2	c3	c4	d	d1	d2	e [1]	e1	g	h
EVF9332-EV EVF9333-EV	488	450	718	680	49	172.5	295.5	419.5	698	49	200	285	164	9	10

[1] For a fieldbus module plugged onto X1, consider mounting space for connecting cables

Mounting cutout in control cabinet

EVF9332-EV EVF9333-EV	428.5	660

5 Wiring of the standard device

Contents

5.1 Important notes 5.1-1
5.1.1 Protection of persons 5.1-1
5.1.2 Device protection 5.1-3
5.1.3 Motor protection 5.1-3
5.2 Notes on project planning 5.2-1
5.2.1 Supply forms / electrical supply conditions 5.2-1
5.2.2 Operation on public supply systems (compliance with EN 61000-3-2) 5.2-1
5.2.3 Controllers in the IT system 5.2-2
5.2.4 Operation at earth-leakage circuit breaker (e.l.c.b.) 5.2-3
5.2.5 Interaction with compensation equipment 5.2-3
5.2.6 Discharge current for mobile systems 5.2-4
5.2.7 Optimisation of the controller and mains load 5.2-5
5.2.8 Reduction of noise emissions 5.2-6
5.2.9 Mains choke/mains filter assignment 5.2-8
5.2.10 Motor cable 5.2-10
5.3 Basics for wiring according to EMC 5.3-1
5.3.1 Shielding 5.3-1
5.3.2 Mains connection, DC supply 5.3-1
5.3.3 Motor cable 5.3-1
5.3.4 Control cables 5.3-3
5.3.5 Installation in the control cabinet 5.3-4
5.3.6 Wiring outside of the control cabinet 5.3-5
5.3.7 Detecting and eliminating EMC interferences 5.3-6
5.4 Standard devices in the power range 0.37 ... 11 kW 5.4-1
5.4.1 Wiring according to EMC (CE-typical drive system) 5.4-1
5.4.2 Important notes 5.4-3
5.4.3 Mains connection, DC supply 5.4-4
5.4.4 Mains connection: Fuses and cable cross-sections 5.4-5
5.4.5 Mains choke/mains filter assignment 5.4-8
5.4.6 Motor connection 5.4-9
5.5 Standard devices in the power range 15 ... 30 kW 5.5-1
5.5.1 Wiring according to EMC (CE-typical drive system) 5.5-1
5.5.2 Important notes 5.5-3
5.5.3 Mains connection, DC supply 5.5-4
5.5.4 Mains connection: Fuses and cable cross-sections 5.5-5
5.5.5 Mains choke/mains filter assignment 5.5-7
5.5.6 Motor connection 5.5-8

5.6 Standard devices in the power range of 55 kW 5.6-1
5.6.1 Wiring according to EMC (CE-typical drive system) 5.6-1
5.6.2 Important notes 5.6-3
5.6.3 Mains connection, DC supply 5.6-4
5.6.4 Mains connection: Fuses and cable cross-sections 5.6-5
5.6.5 Mains choke/mains filter assignment 5.6-6
5.6.6 Motor connection 5.6-7
5.7 Standard devices in the power range 75 ... 90 kW 5.7-1
5.7.1 Wiring according to EMC (CE-typical drive system) 5.7-1
5.7.2 Important notes 5.7-3
5.7.3 Mains connection, DC supply 5.7-4
5.7.4 Mains connection: Fuses and cable cross-sections 5.7-5
5.7.5 Mains choke/mains filter assignment 5.7-6
5.7.6 Motor connection 5.7-7
5.8 Control terminals 5.8-1
5.8.1 Important notes 5.8-1
5.8.2 Connection terminal of the control card 5.8-3
5.8.3 Device variant without ”Safe torque off” function 5.8-4
5.8.4 Device variant with ”Safe torque off” function 5.8-5
5.8.5 Terminal assignment 5.8-8
5.9 Wiring of the system bus (CAN) 5.9-1
5.10 Wiring of the feedback system 5.10-1
5.10.1 Important notes 5.10-1
5.10.2 Incremental encoder with TTL level at X8 . . . . . 5.10-2
5.10.3 Incremental encoder with HTL level at X9 . . . . . 5.10-3
5.11 Wiring of digital frequency input / digital frequency output 5.11-1
5.12 Communication modules 5.12-1

5.1 Important notes

Stop!

The drive controller contains electrostatically sensitive components.

The personnel must be free of electrostatic charge when carrying out assembly and service operations.

5.1.1 Protection of persons

Danger!

Before working on the controller, check that all power terminals are deenergised:

- ► The power terminals U, V, W, $+U_G$ and $-U_G$ remain live for at least 3 minutes after disconnection from the mains.
- ► The power terminals L1, L2, L3, U, V, W, $+U_G$ and $-U_G$ remain live when the motor is stopped.

Pluggable terminal strips

All pluggable terminals must only be connected or disconnected when no voltage is applied!

Electrical isolation

The terminals X1 and X5 have a double (reinforced) insulation in accordance with EN 61800-5-1. The protection against accidental contact is ensured without any further measures.

Danger!

- ► Terminals X3, X4, X6, X8, X9, X10, X11 have a single basic insulation (single isolating distance).
- ► Protection against accidental contact in case of a defective isolating distance is only guaranteed through external measures, e.g. double insulation.
- ► If an external DC 24 V voltage source is used, the insulation level of the controller depends on the insulation level of the voltage source.

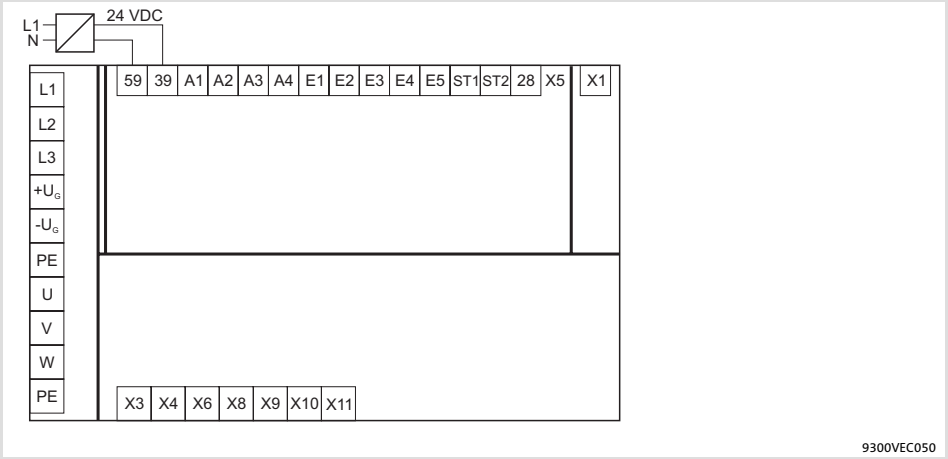

Fig. 5.1-1 Electrical isolation between power terminals, control terminals and housing

Double (reinforced) insulation
Basic insulation

Replacing defective fuses

Only replace defective fuses in the deenergised state to the type specified.

Disconnecting the controller from the mains

Only carry out the safety-related disconnection of the controller from the mains via a contactor on the input side or a manually operated toggle switch.

5.1.2 Device protection

- ► In the event of condensation, only connect the controller to the mains voltage after the humidity has evaporated.
- ► The controller is protected by external fuses.
- ► Drive controllers EVF9324-xV, EVF9326-xV and EVF9328-xV ... EVF9333-xV must only be operated with assigned mains choke / mains filter.
- ► Length of the screws for connecting the shield sheet for the control cables: **12 mm**.
- ► Provide unused control inputs and outputs with terminal strips. Cover unused Sub-D sockets with protective covers included in the scope of supply.
- ► Switching on the motor side of the controller is only permissible for safety shutdown (emergency-off).
- ► Frequent mains switching (e.g. inching mode via mains contactor) can overload and destroy the input current limitation of the drive controller:
  - At least 3 minutes must pass between switching off and restarting the devices EVF9321-xV and EVF9322-xV.
  - At least 3 minutes must pass between two starting procedures of the devices EVF9323-xV ... EVF9333-xV.
  - Use the ”safe torque off” safety function (STO) if safety-related mains disconnections occur frequently. The drive variants Vxx4 are equipped with this function.

5.1.3 Motor protection

- ► Extensive protection against overload:
  - By overcurrent relays or temperature monitoring.
  - We recommend the use of PTC thermistors or thermostats to monitor the motor temperature.
  - PTC thermistors or thermostats can be connected to the controller.
  - For monitoring the motor, we recommend the use of the I^2xt monitoring.
- ► Only use motors with an insulation suitable for the inverter operation:
  - Insulation resistance: min. $\hat{u}$ = 1.5 kV, min. du/dt = 5 kV/µs
  - When using motors with an unknown insulation resistance, please contact your motor supplier.

5.2 Notes on project planning

5.2.1 Supply forms / electrical supply conditions

Observe the restrictions for the different supply forms!

Supply system	Operation of controller	Notes
Supply system: TT, TN (with earthed neutral)	Permitted without restrictions.	● Observe the rated data of the controller ● RMS mains current: see chapter ”Technical data”.
Supply system: IT (with isolated neutral)	Possible if the controller is protected in the event of an earth fault in the supply system ● by means of suitable devices which detect the earth fault and ● immediately separate the controller from the supply system.	● Safe operation in the event of an earth fault at the inverter output cannot be guaranteed. ● The variants V024 / V104 and V100 enable operation of the controller on IT systems.
DC supply via $+U_G/-U_G$	Permitted if the DC voltage is symmetrical to PE.	Earthing of the $+U_G$ or $-U_G$ conductor will destroy the controller.

5.2.2 Operation on public supply systems (compliance with EN 61000-3-2)

European standard EN 61000-3-2 defines limit values for the limitation of harmonic currents in the supply system. Non-linear consumers (e.g. frequency inverters) generate harmonic currents which ”pollute” the supplying mains and may therefore interfere with other consumers. The standard aims at assuring the quality of public supply systems and reducing the mains load.

Note!

The standard only applies to public systems. Mains which are provided with a transformer substation of their own as in industrial plants are not public and not included in the application range of the standard.

If a device or machine consists of several components, the limit values of the standard apply to the entire unit.

Measures for compliance with the standard

With the measures described, the controllers comply with the limit values according to EN 61000-3-2.

Operation on public supply systems	EN 61000-3-2	Limitation of harmonic currents
	Total power on the mains	Compliance with the requirements [1)]
	< 1 kW	With mains choke
	> 1 kW	No measures required

1) The additional measures mentioned have the effect that solely the controllers meet the requirements of EN 61000-3-2. The machine/system manufacturer is responsible for the compliance with the requirements for the machine/system!

5.2.3 Controllers in the IT system

Controllers in the V024, V104 or V100 variants are suitable for operation on insulated supply systems (IT systems). The controllers also have an insulated design. This avoids the activation of the insulation monitoring, even if several controllers are installed.

The electric strength of the controllers is increased so that damage to the controller are avoided if insulation or earth faults in the supply system occur. The operational reliability of the system remains intact.

Stop!

Only operate the controllers with the mains chokes assigned.

Operation with mains filters or RFI filters by Lenze is not permitted, as these modules contain components that are interconnected against PE. By this the protective design of the IT system would be cancelled out. The components are destroyed in the case of an earth fault.

Protect the IT system against earth fault at the controller.

Due to physical conditions, an earth fault on the motor side at the controller can interfere with or damage other devices on the same IT system. Therefore appropriate measures have to be implemented, by means of which the earth fault is detected and which disconnect the controller from the mains.

Permissible supply forms and electrical supply conditions

Mains	Operation of the controllers	Notes
With isolated star point (IT systems)	Possible, if the controller is protected in the event of an earth fault in the supplying mains. ● Possible, if appropriate earth fault detections are available and ● the controller is immediately disconnected from the mains.	Safe operation in the event of an earth fault at the inverter output cannot be guaranteed.

DC-bus operation of several drives

Central supply with 9340 regenerative power supply module is not possible.

Installation of the CE-typical drive system

For the installation of drives on IT systems, the same conditions apply as for the installation on systems with an earthed neutral point.

According to the binding EMC product standard EN61800-3, no limit values are defined for IT systems for noise emission in the high-frequency range.

5.2.4 Operation at earth-leakage circuit breaker (e.l.c.b.)

Danger!

The controllers are internally fitted with a mains rectifier. In case of a short circuit to frame a pulsating DC residual current can prevent the AC sensitive or pulse current sensitive earth-leakage circuit breakers from being activated, thus cancelling the protective function for the entire equipment being operated on this earth-leakage circuit breaker.

- ► For the protection of persons and farm animals (DIN VDE 0100), we recommend
  - – pulse current sensitive earth-leakage circuit breakers for plants including controllers with a single-phase mains connection (L1/N).
  - – universal-current sensitive earth-leakage circuit breakers for plants including controllers with a three-phase mains connection (L1/L2/L3).
- ► Only install the earth-leakage circuit breaker between supplying mains and drive controller.
- ► Earth-leakage circuit breakers may trigger a false alarm due to
  - – capacitive compensation currents flowing in the cable shields during operation (particularly with long, shielded motor cables),
  - – simultaneous connection of several inverters to the mains
  - – the use of additional interference filters.

5.2.5 Interaction with compensation equipment

- ► Controllers only consume very little reactive power of the fundamental wave from the AC supply mains. Therefore, a compensation is not required.
- ► If the controllers are connected to a supply system with compensation equipment, this equipment must comprise chokes.
  - – For this, contact the supplier of the compensation equipment.

5.2.6 Discharge current for mobile systems

Frequency inverters with internal or external RFI filters usually have a discharge current to PE potential that is higher than 3.5 mA AC or 10 mA DC.

Therefore, fixed installation as protection is required (see EN 61800-5-1). This must be indicated in the operational documents.

If a fixed installation is not possible for a mobile consumer although the discharge current to PE potential is higher than 3.5 mA AC or 10 mA DC, an additional two-winding transformer (isolating transformer) can be included in the current supply as a suitable countermeasure. Here, the PE conductor is connected to the PEs of the drive (filter, inverter, motor, shieldings) and also to one of the poles of the secondary winding of the isolating transformer.

Devices with a three-phase supply must have a corresponding isolating transformer with a secondary star connection, the star point being connected to the PE conductor.

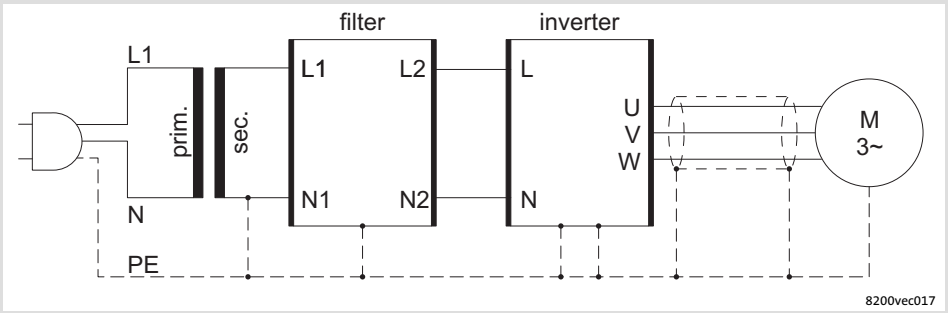

Fig. 5.2-1 Installation of a two-winding transformer (isolating transformer)

5.2.7 Optimisation of the controller and mains load

A mains choke is an inductance which can be included in the mains cable of the frequency inverter. As a result, the load of the supplying mains and the controller is optimised:

- ► Reduced system perturbation: The curved shape of the mains current approaches a sinusoidal shape.
- ► Reduced mains current: The effective mains current is reduced, i.e. the mains, cable, and fuse loads are reduced.
- ► Increased service life of the controller: The electrolytic capacitors in the DC bus have a considerably increased service life due to the reduced AC current load.

There are no restrictions for the combinations of mains chokes and RFI filters and/or motor filters. Alternatively, a mains filter can be used (combination of mains choke and RFI filter in a common housing).

Note!

- ► Some controllers must generally be operated with a mains choke or a mains filter.
- ► If a mains choke or a mains filter is used, the maximum possible output voltage does not reach the value of the mains voltage (typical voltage drop at the rated point 4 ... 6 %).

5.2.8 Reduction of noise emissions

Due to internal switching operations, every controller causes noise emissions which may interfere with the functions of other consumers. Depending on the site of the frequency inverter, European standard EN 61800-3 defines limit values for these noise emissions:

Limit class C2: Limit class C2 is often required for industrial mains which are isolated from the mains of residential areas.

Limit class C1: If the controller is operated in a residential area, it may interfere with other devices such as radio and television receivers. Here, interference suppression measures according to limit class C1 are often required.

Limit class C1 is much more strict than limit class C2. Limit class C1 includes limit class C2.

For compliance with limit class C1 / C2, corresponding measures for the limitation of noise emissions are required, e.g. the use of RFI filters.

There are no restrictions for the combinations of RFI filters and mains chokes and/or motor filters. Alternatively, a mains filter can be used (combination of mains choke and RFI filter in a common housing).

The selection of the frequency inverter and the corresponding filters, if applicable, always depends on the application in question and is determined by e.g. the switching frequency of the controller, the motor cable length, or the protective circuit (e.g. earth-leakage circuit breakers).

Note!

- ► Some controllers must generally be operated with a mains choke or a mains filter.
- ► If a mains choke or a mains filter is used, the maximum possible output voltage does not reach the value of the mains voltage (typical voltage drop at the rated point 4 ... 6 %).

The graphics below illustrates the maximum possible motor cable length based on the type of filter and the resulting interference voltage category according to EN 61800-3. Depending on the used motor cable, the used controller, and its switching frequency, the mentioned maximum motor cable lengths may vary.

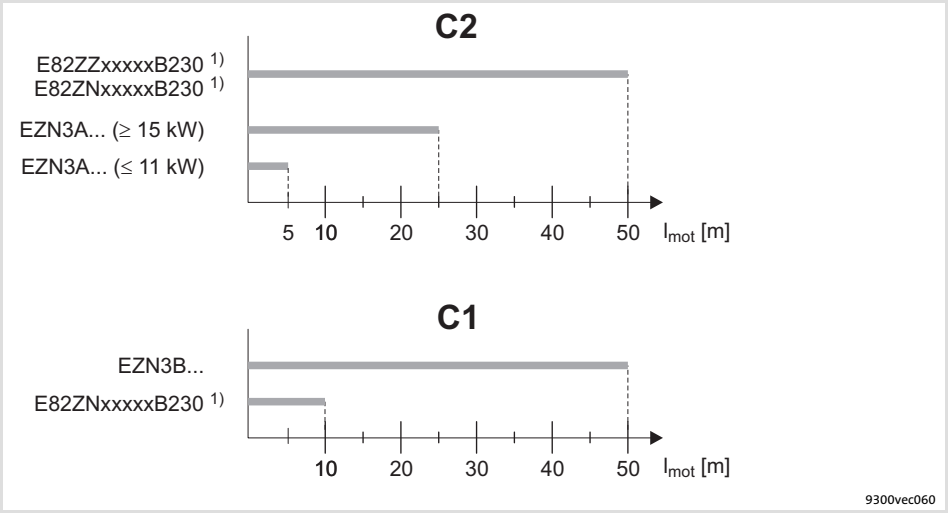

Fig. 5.2-2 Maximum motor cable lengths l_{mot} based on the type of filter for compliance with limit class C2 / C1

1) Use low-capacitance cables

5.2.9 Mains choke/mains filter assignment

Operation with rated power (normal operation)

9300	Mains choke	Interference voltage category according to EN 61800-3 and motor cable length			
		Component		Component	
Type		C2	max. [m]	C1	max. [m]
EVF9321-xV	EZN3A2400H002	EZN3A2400H002	5	EZN3B2400H002	50
EVF9322-xV	EZN3A1500H003	EZN3A1500H003	5	EZN3B1500H003	50
EVF9323-xV	EZN3A0900H004	EZN3A0900H004	5	EZN3B0900H004	50
EVF9324-xV	EZN3A0500H007	EZN3A0500H007	5	EZN3B0500H007	50
EVF9325-xV	EZN3A0300H013	EZN3A0300H013	5	EZN3B0300H013	50
EVF9326-xV	ELN3-0150H024-001	EZN3A0150H024	5	EZN3B0150H024	50
EVF9327-xV	ELN3-0088H035-001	EZN3A0110H030	25	E82ZN22334B230	10
				E82ZZ15334B230 [1]	10
		E82ZN22334B230	50	EZN3B0110H030U [2]	50
		E82ZZ15334B230 [1]	50		
EVF9328-xV	ELN3-0075H045	EZN3A0080H042	25	E82ZN22334B230	10
		E82ZN22334B230	50	EZN3B0080H042	50
EVF9329-xV	ELN3-0055H055	EZN3A0055H060	25	E82ZN30334B230	10
		E82ZN30334B230	50	EZN3B0055H060	50
EVF9330-xV	ELN3-0038H085	EZN3A0037H090	25	E82ZN45334B230	10
		E82ZN45334B230	50	EZN3B0037H090	50
EVF9331-xV	ELN3-0027H105-001	EZN3A0030H110	25	E82ZN55334B230	10
		EZN3A0030H110N001 [3]	25		
		E82ZN55334B230	50	EZN3B0030H110	50
EVF9332-xV	ELN3-0022H130	EZN3A0022H150	25	E82ZN75334B230	10
		E82ZN75334B230	50	EZN3B0022H150	50
EVF9333-xV	ELN3-0017H170	EZN3A0017H200	25	E82ZN90334B230	10
		E82ZN90334B230	50	EZN3B0017H200	50

[1] RFI filter
[2] Footprint filter
[3] For controllers with thermal separation

Operation with increased rated power

9300	Mains choke	Interference voltage category according to EN 61800-3 and motor cable length			
		Component		Component	
Type		C2	max. [m]	C1	max. [m]
EVF9321-xV	EZN3A2400H002	EZN3A2400H002	5	EZN3B2400H002	50
EVF9322-xV	EZN3A1500H003	EZN3A1500H003	5	EZN3B1500H003	50
EVF9323-xV	EZN3A0750H005	EZN3A0750H005	5	EZN3B0750H005	50
EVF9324-xV	EZN3A0400H009	EZN3A0400H009	5	EZN3B0400H009	50
EVF9325-xV	EZN3A0300H013	EZN3A0300H013	5	EZN3B0250H015	50
EVF9327-xV	ELN3-0075H045	EZN3A0080H042	25	E82ZN22334B230	10
		E82ZN22334B230	50	EZN3B0080H042	50
EVF9328-xV	ELN3-0055H055	EZN3A0055H060	25	E82ZN30334B230	10
		E82ZN30334B230	50	EZN3B0055H060	50
EVF9329-xV	–	EZN3B0055H060N003	50	EZN3B0055H060N003	50
EVF9330-xV	ELN3-0027H105-001	EZN3A0030H110	25	E82ZN55334B230	10
				EZN3B0030H110N001 [3]	25
		E82ZN55334B230	50	EZN3B0030H110	50
EVF9331-xV	ELN3-0027H105-001	EZN3A0030H110	25	EZN3B0030H110	50
		EZN3A0030H110N001 [3]	25		
EVF9332-xV	ELN3-0017H170	EZN3A0017H200	25	E82ZN90334B230	10
		E82ZN90334B230	50	EZN3B0017H200	50
EVF9333-xV	ELN3-0014H200	EZN3A0015H230	25	EZN3B0015H230	50
		EZN3A0017H200	25	EZN3B0017H200	50

[3] For controllers with thermal separation

5.2.10 Motor cable

Specification

- ► The used motor cables must
  - – meet the requirements on site (e.g. EN 60204-1, UL),
  - – comply with the following voltage data: EN 0.6/1 kV, UL 600 V.
- ► For shielded motor cables, only use cables with braid made of tinned or nickel-plated copper. Shields made of steel braid are not suitable.
  - – The overlap rate of the braid must be at least 70 % with an overlap angle of 90°.
- ► Use low-capacitance motor cables:

Power class	Capacitance per unit length	
	Core/core	Core/shield
3 ... 11 kW	from 2.5 mm² ≤100 pF/m	≤ 150 pF/m
15 ... 30 kW	≤ 140 pF/m	≤ 230 pF/m
45 ... 55 kW	≤ 190 pF/m	≤ 320 pF/m
75 ... 90 kW	≤ 250 pF/m	≤ 410 pF/m

Cable length

- ► Ensure that the motor cable is as short as possible to have a positive effect on the drive behaviour.
- ► In group drives (multiple motors on one controller), the resulting cable length l_{res} is the crucial factor:

l_{res} [m] = $(l_1 + l_2 + l_3 ... + l_i) \cdot \sqrt{i}$	l_x	Length of the individual motor cable
	l_{res}	Resulting length of the motor cable
	i	Number of individual motor cables

- ► The ”technical data” (chap. 3.1) provided for the motor cable length must be observed.

Cable cross-section

Note!

The cable cross-sections have been assigned to the permissible current loading of the motor cables under the following conditions:

- Compliance with IEC/EN 60204-1 for fixed cable installation
- Compliance with IEC 60354-2-52, table A.52-5 when using the cable in a trailing cable
- Laying system C
- Ambient temperature 45 °C
- Continuous motor operation at a
  – standstill current I_0 for servo motors or a
  – rated current I_R for three-phase asynchronous motors

The user is responsible for selecting a motor cable which complies with the requirements of the current conditions if different situations arise. Different situations may arise due to:

- Laws, standards, national and regional regulations
- Type of application
- Motor utilisation
- Ambient and operating conditions
- Laying system and bundling of cables
- Cable type

Motor cable			
permanently installed	**for trailing cable**	**Cable cross-section**	
I_M [A]	I_M [A]	[mm²]	[AWG]
10.0	11.8	1.0	18
13.8	17.3	1.5	16
19.1	23.7	2.5	14
25.5	30.9	4.0	12
32.8	41.0	6.0	10
45.5	55.5	10	8
60.1	75.5	16	6
76.4	92.8	25	4
94.6	115	35	2
114	140	50	1
146	179	70	00
177	217	95	000
205	252	120	0000

Note!

Information on the design of the motor cable is provided in the ”System cables and system connectors” manual.

5.3 Basics for wiring according to EMC

5.3.1 Shielding

The quality of shielding is determined by a good shield connection:

- ► Connect the shield with a large surface.
- ► Connect the shield directly to the intended shield sheet of the device.
- ► In addition, connect the shield to the conductive and earthed mounting plate with a large contact surface by using a conductive clamp.
- ► Unshielded cable ends must be as short as possible.

5.3.2 Mains connection, DC supply

- ► Controllers, mains chokes, or mains filters may only be connected to the mains via unshielded single cores or unshielded cables.
- ► When a mains filter or RFI filter is used, shield the cable between mains filter or RFI filter and controller if its length exceeds 300 mm. Unshielded cores must be twisted.
- ► In DC-bus operation or DC supply, use shielded cables.
- ► The cable cross-section must be dimensioned for the assigned fusing (observe national and regional regulations).

5.3.3 Motor cable

- ► Only use shielded motor cables with braids made of tinned or nickel-plated copper. Shields made of steel braids are not suitable.
  - – The overlap rate of the braid must be at least 70 % with an overlap angle of 90 °.
- ► The cables used must correspond to the requirements at the location (e.g. EN 60204-1).
- ► Shield the cable for motor temperature monitoring (PTC or thermal contact) and install it separately from the motor cable.
  - – In Lenze system cables, the cable for brake control is integrated into the motor cable. If this cable is not required for brake control, it can also be used to connect the motor temperature monitoring up to a length of 50 m.
- ► Connect the shield with a large surface and fix it with metal cable binders or a conductive clamp.
- ► Connect the shield directly to the corresponding device shield sheet.
  - – If required, additionally connect the shield to the conductive and earthed mounting plate in the control cabinet.
- ► The motor cable is optimally installed if
  - – it is separated from mains cables and control cables,
  - – it only crosses mains cables and control cables at right angles,

– it is not interrupted.

► If the motor cable must be opened all the same (e.g. due to chokes, contactors, or terminals):
  – The unshielded cable ends may not be longer than 100 mm (depending on the cable cross-section).
  – Install chokes, contactors, terminals etc. spatially separated from other components (with a min. distance of 100 mm).
  – Install the shield of the motor cable directly before and behind the point of separation to the mounting plate with a large surface.

► Connect the shield with a large surface to PE in the terminal box of the motor at the motor housing.
  – Metal EMC cable glands at the motor terminal box ensure a large surface connection of the shield with the motor housing.

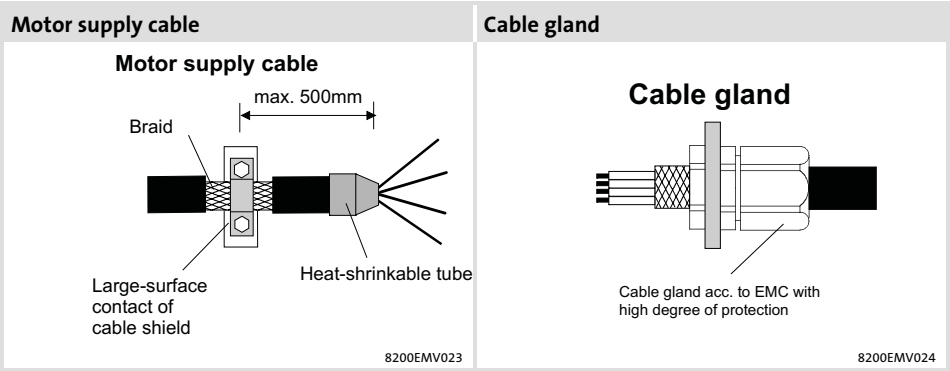

Fig. 5.3-1 Shielding of the motor cable

5.3.4 Control cables

- ► Control cables must be shielded to minimise interference injections.
- ► For lengths of 200 mm and more, use only shielded cables for analog and digital inputs and outputs. Under 200 mm, unshielded but twisted cables may be used.
- ► Connect the shield correctly:
  - – The shield connections of the control cables must be at a distance of at least 50 mm from the shield connections of the motor cables and DC cables.
  - – Connect the shield of digital input and output cables at both ends.
  - – Connect the shield of analog input and output cables at one end (at the drive controller).
- ► To achieve an optimum shielding effect (in case of very long cables, with high interference) one shield end of analog input and output cables can be connected to PE potential via a capacitor (e.g. 10 nF/250 V) (see sketch).

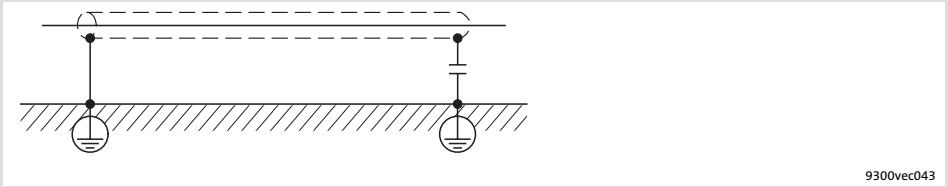

Fig. 5.3-2 Shielding of long, analog control cables

5.3.5 Installation in the control cabinet

Mounting plate requirements

- ► Only use mounting plates with conductive surfaces (zinc-coated or V2A-steel).
- ► Painted mounting plates are not suitable even if the paint is removed from the contact surfaces.
- ► If several mounting plates are used, ensure a large-surface connection between the mounting plates (e.g. by using earthing strips).

Mounting of the components

- ► Connect controllers, filters, and chokes to the earthed mounting plate with a surface as large as possible.

Optimum cable routing

- ► The motor cable is optimally installed if
  – it is separated from mains cables and control cables,
  – it crosses mains cables and control cables at right angles.
- ► Always install cables close to the mounting plate (reference potential), as freely suspended cables act like aerials.
- ► Lead the cables to the terminals in a straight line (avoid tangles of cables).
- ► Use separated cable channels for motor cables and control cables. Do not mix up different cable types in one cable channel.
- ► Minimise coupling capacities and coupling inductances by avoiding unnecessary cable lengths and reserve loops.
- ► Short-circuit unused cores to the reference potential.
- ► Install the positive and negative wires for DC 24 V close to each other over the entire length to avoid loops.

Earth connections

- ► Connect all components (drive controllers, chokes, filters) to a central earthing point (PE rail).
- ► Set up a star-shape earthing system.
- ► Comply with the corresponding minimum cable cross-sections.

5.3.6 Wiring outside of the control cabinet

Notes for cable routing outside the control cabinet:

- ► The longer the cables the greater the space between the cables must be.
- ► If cables for different signal types are routed in parallel, the interferences can be minimized by means of a metal barrier or separated cable ducts.

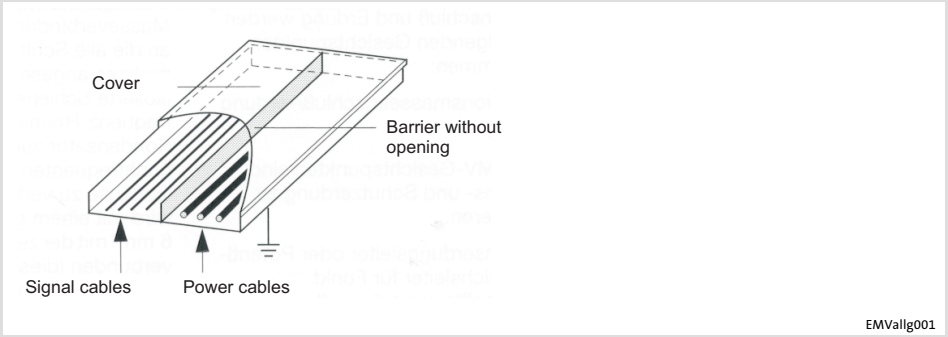

Fig. 5.3-3 Cable routing in the cable duct with barrier

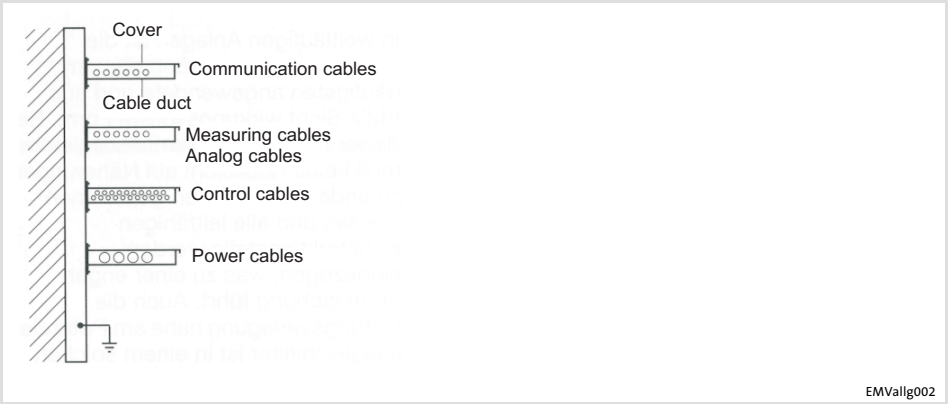

Fig. 5.3-4 Cable routing in separated cable ducts

5.3.7 Detecting and eliminating EMC interferences

Fault	Cause	Remedy
Interferences of analog setpoints of your own or other devices and measuring systems	Unshielded motor cable	Use shielded motor cable
	Shield contact is not extensive enough	Carry out optimal shielding as specified
	Shield of the motor cable is interrupted by terminal strips, switched, etc.	● Separate components from other component part with a minimum distance of 100 mm ● Use motor choke/motor filter
	Install additional unshielded cables inside the motor cable (e.g. for motor temperature monitoring)	Install and shield additional cables separately
	Too long and unshielded cable ends of the motor cable	Shorten unshielded cable ends to maximally 40 mm
Conducted interference level is exceeded on the supply side	Terminal strips for the motor cable are directly located next to the mains terminals	Spatially separate the terminal strips for the motor cable from main terminals and other control terminals with a minimum distance of 100 mm
	Mounting plate varnished	Optimise PE connection: ● Remove varnish ● Use zinc-coated mounting plate
	HF short circuit	Check cable routing

5.4 Standard devices in the power range 0.37 ... 11 kW

5.4.1 Wiring according to EMC (CE-typical drive system)

The drives comply with the EC Directive on ”Electromagnetic Compatibility” if they are installed in accordance with the specifications for the CE-typical drive system. The user is responsible for the compliance of the machine application with the EC Directive.

Note!

Observe the notes given in the chapter ”Basics for wiring according to EMC”!

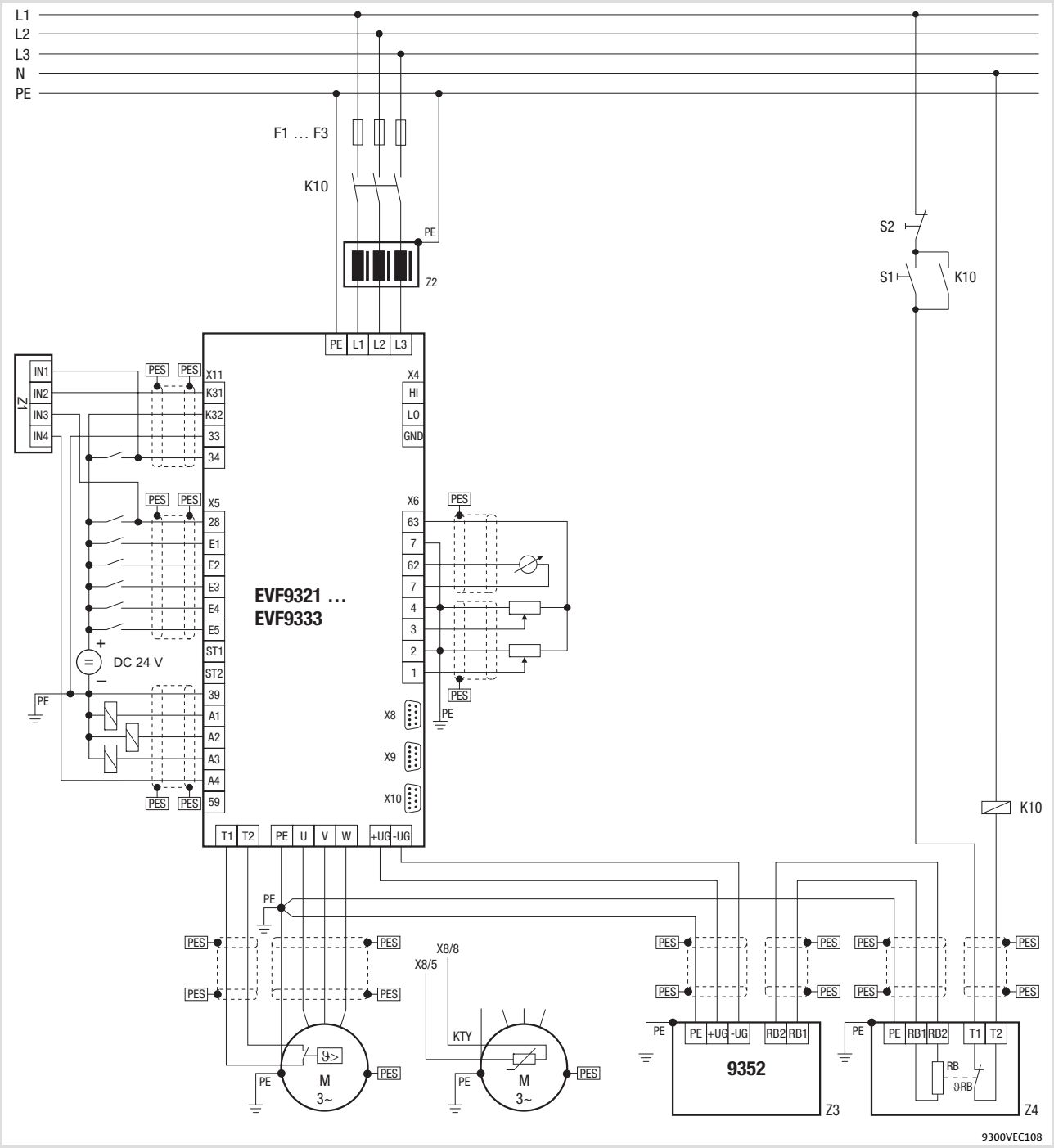

Fig. 5.4-1 Example for wiring in accordance with EMC regulations

F1 ... F3	Fuses
K10	Mains contactor
Z1	Programmable logic controller (PLC)
Z2	Mains choke or mains filter
Z3	Brake chopper EMB9352-E
Z4	Brake resistor
S1	Mains contactor on
S2	Mains contactor off
$+U_G$, $-U_G$	DC-bus connection
PES	HF shield termination through large-surface connection to PE

5.4.2 Important notes

To gain access to the power connections, remove the covers:

► Release the cover for the mains connection with slight pressure on the front and pull it off to the top.

► Release the cover for the motor connection with slight pressure on the front and pull it off to the bottom.

Installation material required from the scope of supply:

Description	Use	Quantity
Shield connection support	Support of the shield sheets for the supply cable and motor cable	2
Hexagon nut M5	Fastening of shield connection supports	4
Spring washer ∅ 5 mm (DIN 127)		2
Serrated lock washer ∅ 5.3 mm (DIN 125)		2
Shield sheet	Shield connections for supply cables, motor cable	2
Screw and washer assembly M4 × 10 mm (DIN 6900)	Fastening of shield sheets	4

5.4.3 Mains connection, DC supply

Note!

- ► If a mains filter or RFI filter is used and the cable length between mains/RFI filter and drive controller exceeds 300 mm, install a shielded cable.
- ► For DC-bus operation or DC supply, we recommend using shielded DC cables.

Shield sheet installation

Stop!

- ► To avoid damaging the PE stud, always install the shield sheet and the PE connection in the order displayed. The required parts are included in the accessory kit.
- ► Do not use lugs as strain relief.

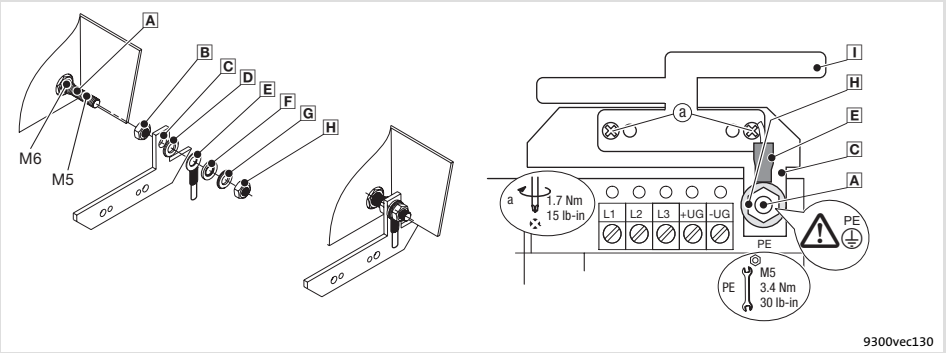

Fig. 5.4-2 Installation of shield sheet for drive controllers 0.37 ... 11 kW

- A PE stud
- B Screw on M5 nut and tighten hand-tight
- C Slide on fixing bracket for shield sheet
- D Slide on serrated lock washer
- E Slide on PE cable with ring cable lug
- F Slide on washer
- G Slide on spring washer
- H Screw on M5 nut and tighten it
- I Screw shield sheet on fixing bracket with two M4 screws (a)

Mains connection, DC supply

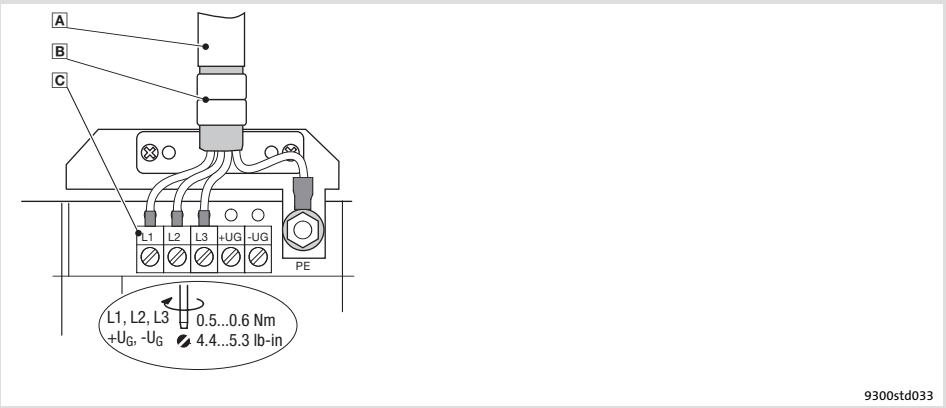

Fig. 5.4-3 Mains connection, DC supply for drive controllers 0.37 ... 11 kW

- A Mains cable
- B Shield sheet
  Securely clamp mains cable with the lugs
- C Mains and DC bus connection
  L1, L2, L3: Connection of mains cable
  $+U_G$, $-U_G$: Connection of DC-bus components or connection of the controller in the DC-bus system (see system manual)
  Cable cross-sections up to 4 mm^2: Use wire end ferrules for flexible cables
  Cable cross-sections > 4 mm^2: Use pin-end connectors

5.4.4 Mains connection: Fuses and cable cross-sections

Installation in accordance with EN 60204-1

Supply conditions	
Range	Description
Fuses	● Utilisation category: only gG/gL or gRL
Cables	Laying systems B2 and C: Use of PVC-insulated copper cables, conductor temperature < 70 °C, ambient temperature < 40 °C, no bundling of the cables or cores, three loaded cores. The data are recommendations. Other dimensionings/laying systems are possible (e.g. in accordance with VDE 0298-4).
RCCB	● Controllers can cause a DC current in the PE conductor. If a residual current device (RCD) or a fault current monitoring unit (RCM) is used for protection in the case of direct or indirect contact, only one RCD/RCM of the following type can be used on the current supply side: – Type B (universal-current sensitive) for connection to a three-phase system – Type A (pulse-current sensitive) or type B (universal-current sensitive) for connection to a 1-phase system Alternatively another protective measure can be used, like for instance isolation from the environment by means of double or reinforced insulation, or isolation from the supply system by using a transformer. ● Earth-leakage circuit breakers must only be installed between mains supply and controller.
Observe all national and regional regulations!	

Operation at rated power

9300	Rated fuse current		Cable cross-section		FI [1]
	Fuse	Circuit-breaker	Laying system L1, L2, L3, PE		
			B2	C	
Type	[A]	[A]	[mm²]	[mm²]	[mA]
Operation without mains choke/mains filter					
EVF9321-xV	6	C6, B6 [2]	1	1	300
EVF9322-xV	6	C6, B6 [2]	1	1	
EVF9323-xV	10	B10	1.5	1	
EVF9325-xV	25	B20	4	2.5	
Operation with mains choke/mains filter					
EVF9321-xV	6	C6, B6 [2]	1	1	300
EVF9322-xV	6	C6, B6 [2]	1	1	
EVF9323-xV	10	B10	1.5	1	
EVF9324-xV	10	B10	1.5	1	
EVF9325-xV	20	B16	2.5	2.5	
EVF9326-xV	32	B25	–	4	

1) Universal current-sensitive earth-leakage circuit breaker
2) For short-time mains interruptions, use circuit breakers with tripping characteristic ”C”

Operation with increased rated power

9300	Rated fuse current		Cable cross-section		FI [1]
	Fuse	Circuit-breaker	Laying system L1, L2, L3, PE		
			B2	C	
Type	[A]	[A]	[mm²]	[mm²]	[mA]
Operation with mains choke/mains filter					
EVF9321-xV	6	C6, B6 [2]	1	1	300
EVF9322-xV	6	C6, B6 [2]	1	1	
EVF9323-xV	10	B10	1.5	1	
EVF9324-xV	10	B10	1.5	1	
EVF9325-xV	20	B16	2.5	2.5	

1) Universal current-sensitive earth-leakage circuit breaker
2) For short-time mains interruptions, use circuit breakers with tripping characteristic ”C”

Installation to UL

Supply conditions	
Range	Description
Fuses	● Only in accordance with UL 248 ● System short-circuit current up to 5000 A_{rms} : All classes are permissible ● System short-circuit current up to 50000 A_{rms} : Only classes ”CC”, ”J”, ”T” or ”R” permissible
Cables	● Only in accordance with UL ● The cable cross-sections specified in the following apply under the following conditions: – Conductor temperature < 60 °C – Ambient temperature < 40 °C
Observe all national and regional regulations!	

Operation at rated power

9300	Rated fuse current	Cable cross-section
	Fuse	L1, L2, L3, PE
Type	[A]	[AWG]
Operation without mains choke/mains filter		
EVF9321-xV	6	18
EVF9322-xV	6	18
EVF9323-xV	10	16
EVF9325-xV	25	10
Operation with mains choke/mains filter		
EVF9321-xV	6	18
EVF9322-xV	6	18
EVF9323-xV	10	16
EVF9324-xV	10	16
EVF9325-xV	25	10
EVF9326-xV	25	10

Max. connection cross-section of the terminal strip: AWG 12, with pin-end connector AWG 10

5.4.5 Mains choke/mains filter assignment

Operation with rated power (normal operation)

9300	Mains choke	Interference voltage category according to EN 61800-3 and motor cable length			
		Component		Component	
Type		C2	max. [m]	C1	max. [m]
EVF9321-xV	EZN3A2400H002	EZN3A2400H002	5	EZN3B2400H002	50
EVF9322-xV	EZN3A1500H003	EZN3A1500H003	5	EZN3B1500H003	50
EVF9323-xV	EZN3A0900H004	EZN3A0900H004	5	EZN3B0900H004	50
EVF9324-xV	EZN3A0500H007	EZN3A0500H007	5	EZN3B0500H007	50
EVF9325-xV	EZN3A0300H013	EZN3A0300H013	5	EZN3B0300H013	50
EVF9326-xV	ELN3-0150H024-001	EZN3A0150H024	5	EZN3B0150H024	50

Operation with increased rated power

9300	Mains choke	Interference voltage category according to EN 61800-3 and motor cable length			
		Component		Component	
Type		C2	max. [m]	C1	max. [m]
EVF9321-xV	EZN3A2400H002	EZN3A2400H002	5	EZN3B2400H002	50
EVF9322-xV	EZN3A1500H003	EZN3A1500H003	5	EZN3B1500H003	50
EVF9323-xV	EZN3A0750H005	EZN3A0750H005	5	EZN3B0750H005	50
EVF9324-xV	EZN3A0400H009	EZN3A0400H009	5	EZN3B0400H009	50
EVF9325-xV	EZN3A0300H013	EZN3A0300H013	5	EZN3B0250H015	50

5.4.6 Motor connection

Note!

- ► Fusing the motor cable is not required.
- ► The drive controller features 2 connections for motor temperature monitoring:
  - – Terminals T1, T2 for connecting a PTC thermistor or thermal contact (NC contact).
  - – Pins X8/5 and X8/8 of the incremental encoder input (X8) for connecting a KTY thermal sensor.

Shield sheet installation

Stop!

- ► To avoid damaging the PE stud, always install the shield sheet and the PE connection in the order displayed. The required parts are included in the accessory kit.
- ► Do not use lugs as strain relief.

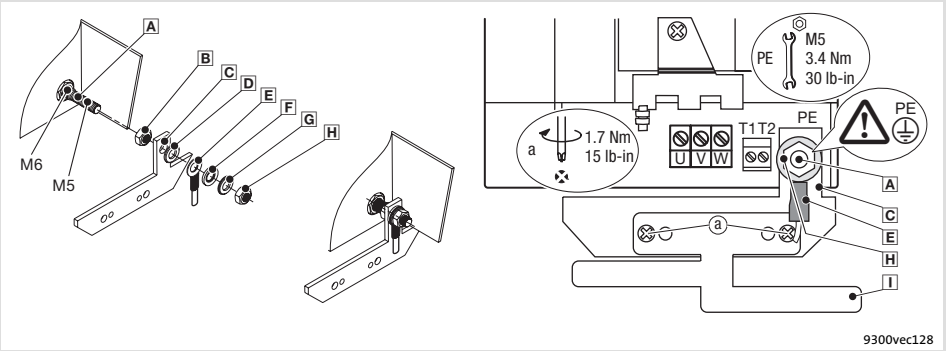

Fig. 5.4-4 Installation of shield sheet for drive controllers 0.37 ... 11 kW

- A PE stud
- B Screw on M5 nut and tighten hand-tight
- C Slide on fixing bracket for shield sheet
- D Slide on serrated lock washer
- E Slide on PE cable with ring cable lug
- F Slide on washer
- G Slide on spring washer
- H Screw on M5 nut and tighten it
- I Screw shield sheet on fixing bracket with two M4 screws (a)

Motor with PTC thermistor or thermal contact (NC contact)

Wire T1, T2 only if the motor is equipped with a PTC thermistor or thermal contact (NC contact).

► An ”open” cable acts like an antenna and can cause faults on the drive controller.

Danger!

► All control terminals only have basic insulation (single isolating distance) after connecting a PTC thermistor or a thermal contact.

► Protection against accidental contact in case of a defective isolating distance is only guaranteed through external measures, e.g. double insulation.

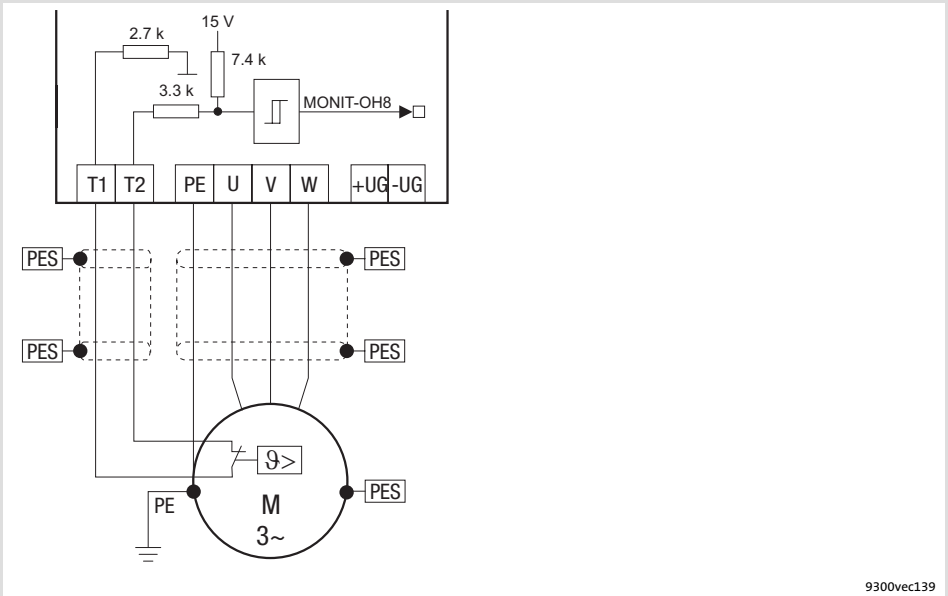

Fig. 5.4-5 Circuit diagram of motor connection with PTC thermistor or thermal contact (NC contact) at T1, T2

Characteristics of the connection for motor temperature monitoring:

Terminals T1, T2	
Connection	● PTC thermistor – PTC thermistor with defined tripping temperature (acc. to DIN 44081 and DIN 44082) ● Thermal contact (NC contact) – Thermostat as NC contact
Tripping point	● Fixed (depending on the PTC/thermal contact) ● PTC: $R\vartheta > 1600\ \Omega$ ● Configurable as warning or error (TRIP)
Notes	● Monitoring is not active in the Lenze setting. ● If you do not use a Lenze motor, we recommend the use of a PTC thermistor up to 150°C.

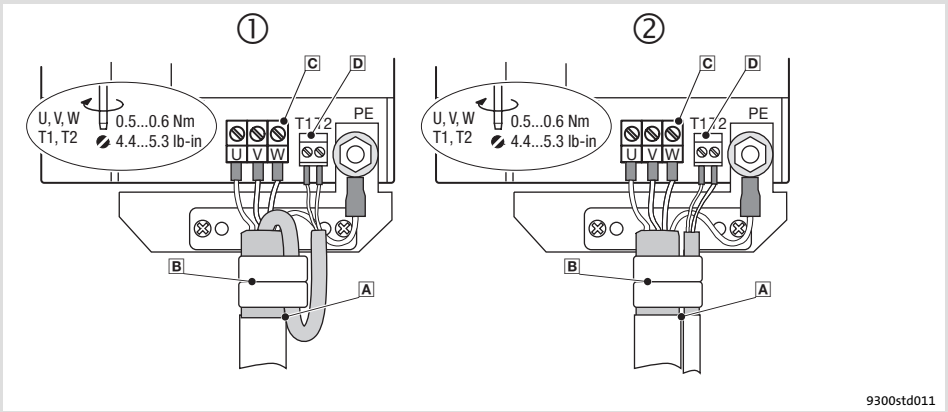

Fig. 5.4-6 Motor connection with PTC thermistor or thermal contact (NC contact)

① A Motor connection with Lenze system cable with integrated control cable for the motor temperature monitoring

B Shield sheet
Clamp entire shield **and** shield of the control cable for the motor temperature monitoring with the straps. If required, fix by means of cable tie.

② A Motor cable connection and separate control cable for the motor temperature monitoring

B Shield sheet
Clamp shield of the motor cable **and** shield of the cable for the motor temperature monitoring with the straps. If required, fix by means of cable tie.

C U, V, W
Motor cable connection
Check the correct polarity. Observe maximum length of the motor cable. Use wire end ferrules for flexible cables.
Max. connectable cable cross-section: 4 mm^2, with pin-end connector > 4 mm^2

D T1, T2 for motor temperature monitoring
Cable connection for PTC thermistors or thermal contacts (NC contacts)

Motor with KTY thermal sensor

Note!

- ► We recommend to use Lenze system cables for wiring.
- ► For self-made cables only use cables with shielded cores twisted in pairs.

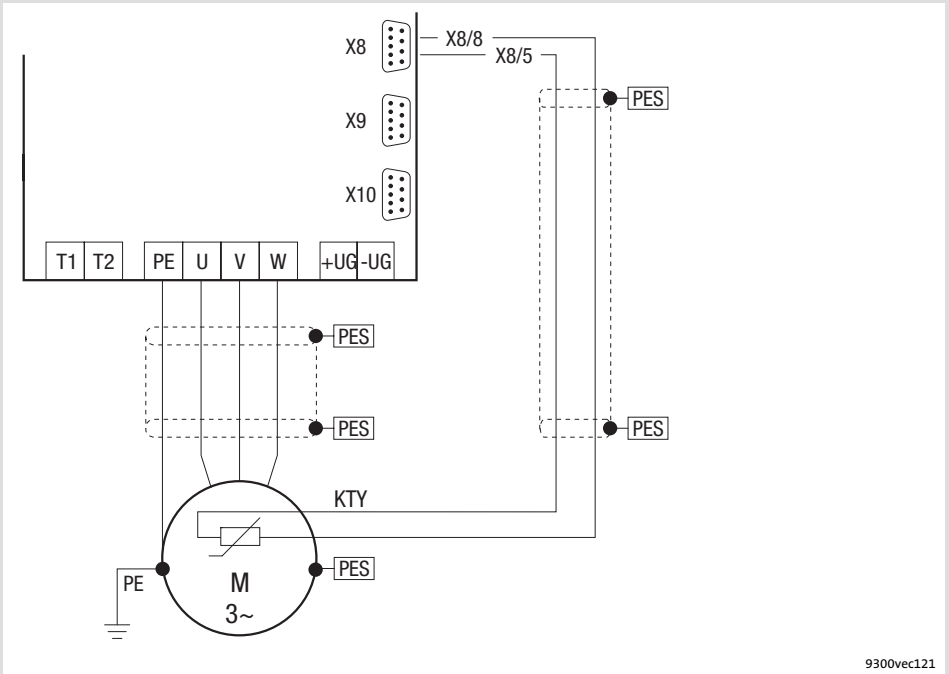

Fig. 5.4-7 Circuit diagram of motor connection with KTY thermal sensor at incremental encoder input X8

Characteristics of the connection for motor temperature monitoring:

Pins X8/5, X8/8 of incremental encoder input (X8)	
Connection	Linear KTY thermal sensor
Tripping point	• Warning: Adjustable • Error (TRIP): Fixed at 150 °C
Notes	• Monitoring is not active in the Lenze setting. • The KTY thermal sensor is monitored with regard to interruption and short circuit.

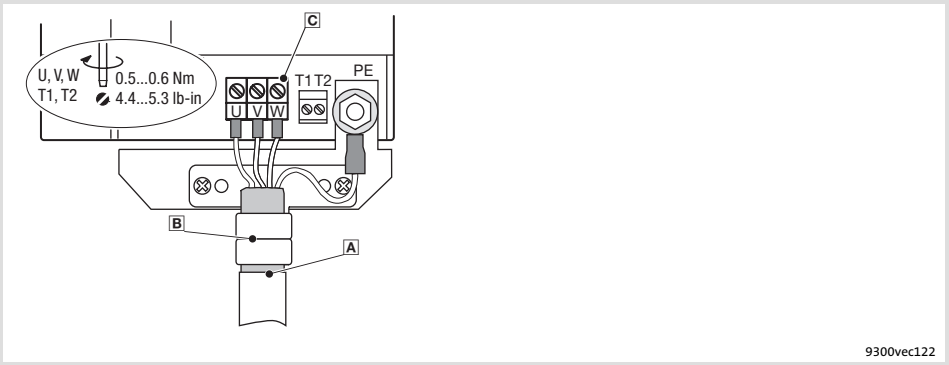

Fig. 5.4-8 Motor connection with KTY thermal sensor

A Motor cable

B Shield sheet
Clamp the motor cable shield with the straps. If required, fix by means of cable tie.

C U, V, W
Motor cable connection
Check the correct polarity. Observe maximum length of the motor cable. Use wire end ferrules for flexible cables.
Max. connectable cable cross-section: 4 mm^2, with pin-end connector > 4 mm^2

5.5 Standard devices in the power range 15 ... 30 kW

5.5.1 Wiring according to EMC (CE-typical drive system)

The drives comply with the EC Directive on ”Electromagnetic Compatibility” if they are installed in accordance with the specifications for the CE-typical drive system. The user is responsible for the compliance of the machine application with the EC Directive.

Note!

Observe the notes given in the chapter ”Basics for wiring according to EMC”!

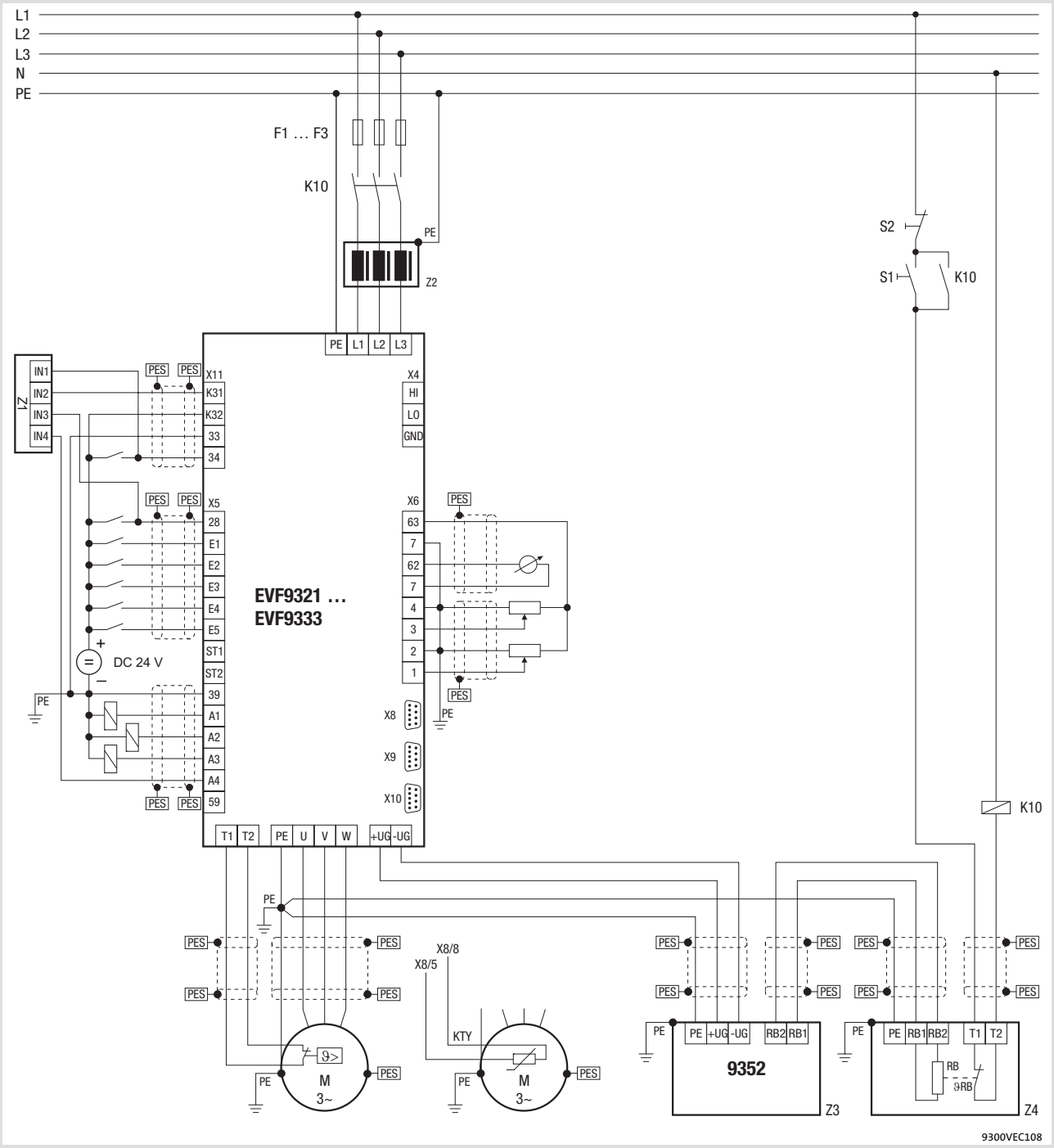

Fig. 5.5-1 Example for wiring in accordance with EMC regulations

F1 ... F3	Fuses
K10	Mains contactor
Z1	Programmable logic controller (PLC)
Z2	Mains choke or mains filter
Z3	Brake chopper EMB9352-E
Z4	Brake resistor
S1	Mains contactor on
S2	Mains contactor off
$+U_G$, $-U_G$	DC-bus connection
PES	HF shield termination through large-surface connection to PE

5.5.2 Important notes

To gain access to the power connections, remove the cover:

Remove the cover of the drive controller	
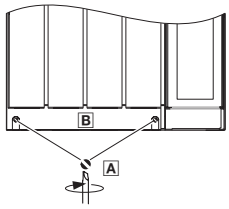	1. Remove the screws A 2. Lift cover B up and detach it

Installation material required from the scope of supply:

Description	Use	Quantity
Hexagon nut M6 (DIN 934)	Connection of supply cables (mains, $+U_G$, $-U_G$) and motor cable to the stud bolts	10
Washer ∅ 6 mm (DIN 125)	For hexagon nut M6	10
Spring washer ∅ 6 mm (DIN 127)	For hexagon nut M6	10
Grommet	Motor cable	1
Shield connection support	Support of the shield sheet for motor cable	1
Self-tapping screw ∅ 4 × 14 mm	Fastening of shield connection support	2
Shield sheet	Shield connection for motor cable	1

5.5.3 Mains connection, DC supply

Note!

- ► If a mains filter or RFI filter is used and the cable length between mains/RFI filter and drive controller exceeds 300 mm, install a shielded cable.
- ► For DC-bus operation or DC supply, we recommend using shielded DC cables.

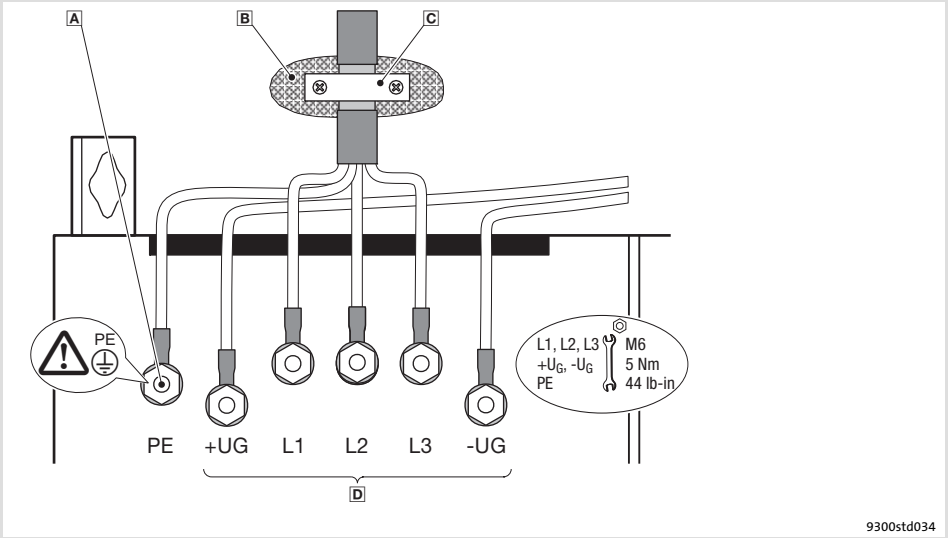

Fig. 5.5-2 Mains connection, DC supply for drive controllers 15 ... 30 kW

A PE stud
Connect PE cable with ring cable lug

B Conductive surface

C Shield clamp
Place shield with large surface on control cabinet mounting plate and fasten with shield clamp (shield clamp is not part of the scope of supply)
To improve the shield connection, also place the shield on the PE stud

D Mains and DC bus connection
L1, L2, L3: Connection of mains cable with ring cable lugs
$+U_G$, $-U_G$: Connection of DC-bus components or connection of the controller in the DC-bus system (see system manual)

5.5.4 Mains connection: Fuses and cable cross-sections

Installation in accordance with EN 60204-1

Supply conditions	
Range	Description
Fuses	● Utilisation category: only gG/gL or gRL
Cables	Laying systems B2 and C: Use of PVC-insulated copper cables, conductor temperature < 70 °C, ambient temperature < 40 °C, no bundling of the cables or cores, three loaded cores. The data are recommendations. Other dimensionings/laying systems are possible (e.g. in accordance with VDE 0298-4).
RCCB	● Controllers can cause a DC current in the PE conductor. If a residual current device (RCD) or a fault current monitoring unit (RCM) is used for protection in the case of direct or indirect contact, only one RCD/RCM of the following type can be used on the current supply side: – Type B (universal-current sensitive) for connection to a three-phase system – Type A (pulse-current sensitive) or type B (universal-current sensitive) for connection to a 1-phase system Alternatively another protective measure can be used, like for instance isolation from the environment by means of double or reinforced insulation, or isolation from the supply system by using a transformer. ● Earth-leakage circuit breakers must only be installed between mains supply and controller.
Observe all national and regional regulations!	

Operation at rated power

9300	Rated fuse current		Cable cross-section		FI [1]
	Fuse	Circuit-breaker	Laying system L1, L2, L3, PE		
			B2	C	
Type	[A]	[A]	[mm²]	[mm²]	[mA]
Operation without mains choke/mains filter					
EVF9327-xV	63	–	16	16	300
Operation with mains choke/mains filter					
EVF9327-xV	40	–	10	10	300
EVF9328-xV	63	–	25	16	
EVF9329-xV	80	–	–	25	

[1] Universal current-sensitive earth-leakage circuit breaker

Operation with increased rated power

9300	Rated fuse current		Cable cross-section		FI [1]
	Fuse	Circuit-breaker	Laying system L1, L2, L3, PE		
			B2	C	
Type	[A]	[A]	[mm²]	[mm²]	[mA]
Operation with mains choke/mains filter					
EVF9327-xV	50	–	16	10	300
EVF9328-xV	63	–	25	16	
EVF9329-xV	80	–	–	25	

[1] Universal current-sensitive earth-leakage circuit breaker

Installation to UL

Supply conditions	
Range	Description
Fuses	● Only according to UL 248 ● Mains short-circuit current up to 5000 A_{rms}: All classes permissible ● Mains short-circuit current up to 50000 A_{rms}: Only classes ”J”, ”T” or ”R” permissible
Cables	● Only in accordance with UL ● The cable cross-sections specified in the following apply under the following conditions: – Conductor temperature < 60 °C – Ambient temperature < 40 °C
Observe all national and regional regulations!	

Operation at rated power

9300	Rated fuse current	Cable cross-section
	Fuse	L1, L2, L3, PE
Type	[A]	[AWG]
Operation with mains choke/mains filter		
EVF9327-xV	35	8
EVF9328-xV	50	6
EVF9329-xV	80	4

5.5.5 Mains choke/mains filter assignment

Operation with rated power (normal operation)

9300	Mains choke	Interference voltage category according to EN 61800-3 and motor cable length			
		Component		Component	
Type		C2	max. [m]	C1	max. [m]
EVF9327-xV	ELN3-0088H035-001	EZN3A0110H030	25	E82ZN22334B230	10
				E82ZZ15334B230 [1]	10
		E82ZN22334B230	50	EZN3B0110H030U [2]	50
		E82ZZ15334B230 [1]	50		
EVF9328-xV	ELN3-0075H045	EZN3A0080H042	25	E82ZN22334B230	10
		E82ZN22334B230	50	EZN3B0080H042	50
EVF9329-xV	ELN3-0055H055	EZN3A0055H060	25	E82ZN30334B230	10
		E82ZN30334B230	50	EZN3B0055H060	50

[1] RFI filter
[2] Footprint filter

Operation with increased rated power

9300	Mains choke	Interference voltage category according to EN 61800-3 and motor cable length			
		Component		Component	
Type		C2	max. [m]	C1	max. [m]
EVF9327-xV	ELN3-0075H045	EZN3A0080H042	25	E82ZN22334B230	10
		E82ZN22334B230	50	EZN3B0080H042	50
EVF9328-xV	ELN3-0055H055	EZN3A0055H060	25	E82ZN30334B230	10
		E82ZN30334B230	50	EZN3B0055H060	50
EVF9329-xV	–	EZN3B0055H060N003	50	EZN3B0055H060N003	50

5.5.6 Motor connection

Note!

► Fusing the motor cable is not required.

► The drive controller features 2 connections for motor temperature monitoring:
- Terminals T1, T2 for connecting a PTC thermistor or thermal contact (NC contact).
- Pins X8/5 and X8/8 of the incremental encoder input (X8) for connecting a KTY thermal sensor.

Shield sheet installation

Stop!

Do not use lugs as strain relief.

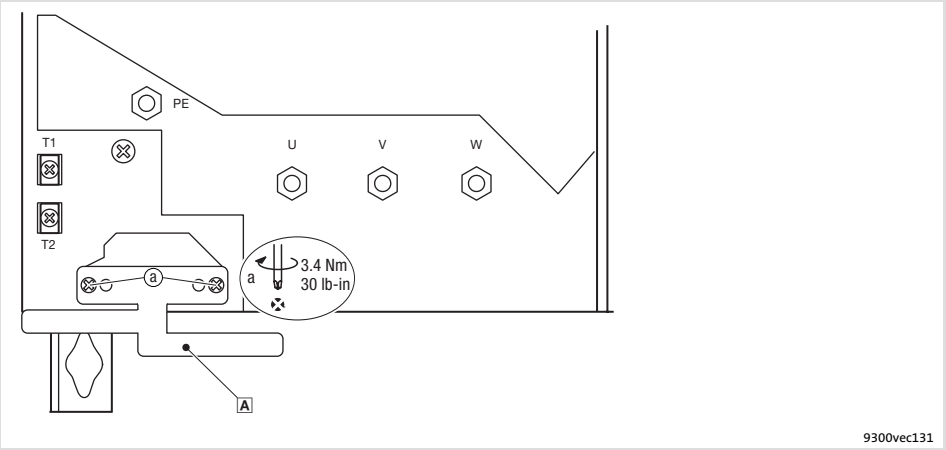

Fig. 5.5-3 Installation of shield sheet for drive controllers 15 ... 30 kW

A Fasten the shield sheet with two self-tapping screws ∅ 4 × 14 mm (a)

Motor with PTC thermistor or thermal contact (NC contact)

Wire T1, T2 only if the motor is equipped with a PTC thermistor or thermal contact (NC contact).

► An "open" cable acts like an antenna and can cause faults on the drive controller.

Danger!

► All control terminals only have basic insulation (single isolating distance) after connecting a PTC thermistor or a thermal contact.

► Protection against accidental contact in case of a defective isolating distance is only guaranteed through external measures, e.g. double insulation.

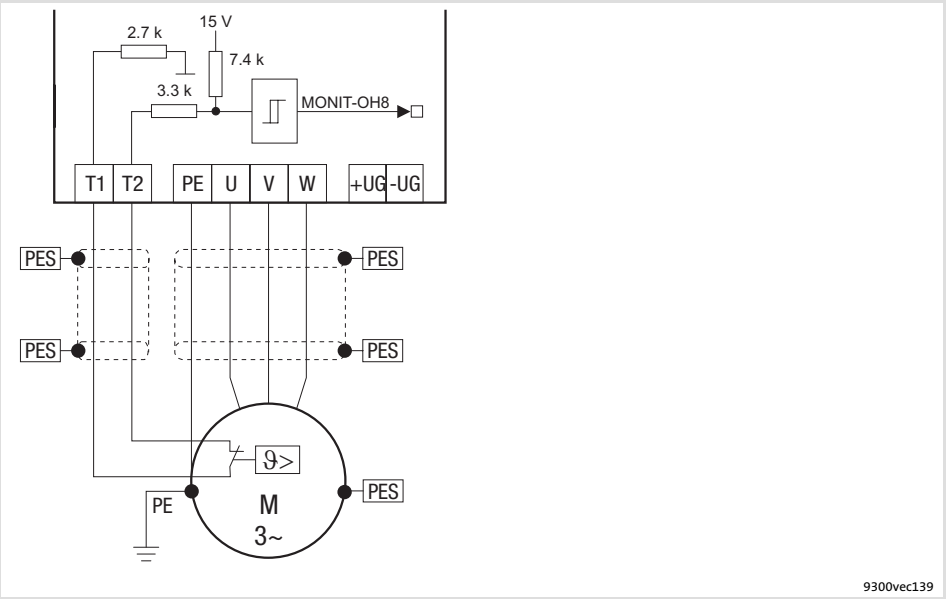

Fig. 5.5-4 Circuit diagram of motor connection with PTC thermistor or thermal contact (NC contact) at T1, T2

Characteristics of the connection for motor temperature monitoring:

Terminals T1, T2	
Connection	● PTC thermistor – PTC thermistor with defined tripping temperature (acc. to DIN 44081 and DIN 44082) ● Thermal contact (NC contact) – Thermostat as NC contact
Tripping point	● Fixed (depending on the PTC/thermal contact) ● PTC: $R\vartheta > 1600\ \Omega$ ● Configurable as warning or error (TRIP)
Notes	● Monitoring is not active in the Lenze setting. ● If you do not use a Lenze motor, we recommend the use of a PTC thermistor up to 150°C.

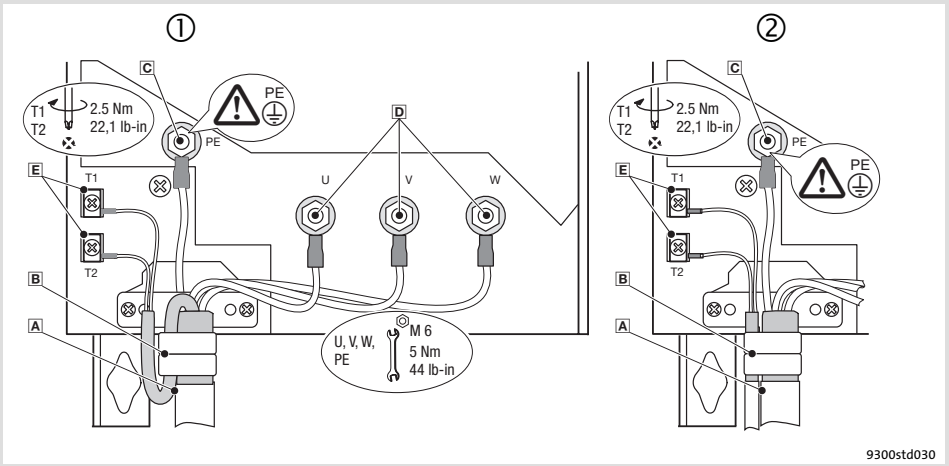

Fig. 5.5-5 Motor connection with PTC thermistor or thermal contact (NC contact)

① A Motor connection with Lenze system cable with integrated control cable for the motor temperature monitoring

B Shield sheet
Clamp entire shield **and** shield of the control cable for the motor temperature monitoring with the straps. If required, fix by means of cable tie.

② A Motor cable connection and separate control cable for the motor temperature monitoring

B Shield sheet
Clamp shield of the motor cable **and** shield of the cable for the motor temperature monitoring with the straps. If required, fix by means of cable tie.

C PE stud
PE cable connection with ring cable lug

D U, V, W
Motor cable connection
Check the correct polarity. Observe maximum length of the motor cable.
Max. connectable cable cross-section: 50 mm^2 with ring cable lug

E T1, T2 for motor temperature monitoring
Cable connection for PTC thermistors or thermal contacts (NC contacts)

Motor with KTY thermal sensor

Note!

- ► We recommend to use Lenze system cables for wiring.
- ► For self-made cables only use cables with shielded cores twisted in pairs.

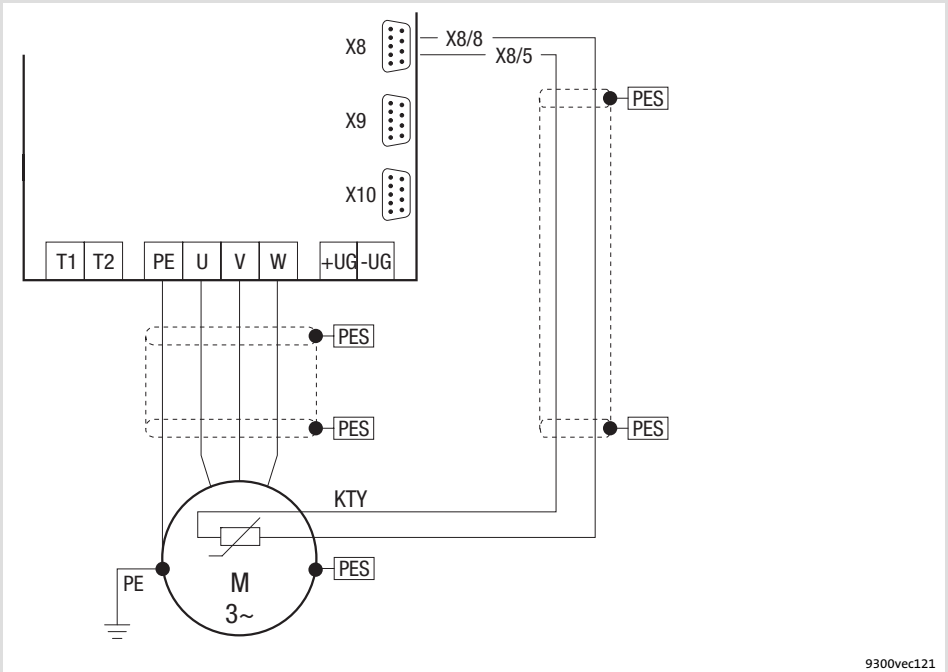

Fig. 5.5-6 Circuit diagram of motor connection with KTY thermal sensor at incremental encoder input X8

Characteristics of the connection for motor temperature monitoring:

Pins X8/5, X8/8 of incremental encoder input (X8)	
Connection	Linear KTY thermal sensor
Tripping point	• Warning: Adjustable • Error (TRIP): Fixed at 150 °C
Notes	• Monitoring is not active in the Lenze setting. • The KTY thermal sensor is monitored with regard to interruption and short circuit.

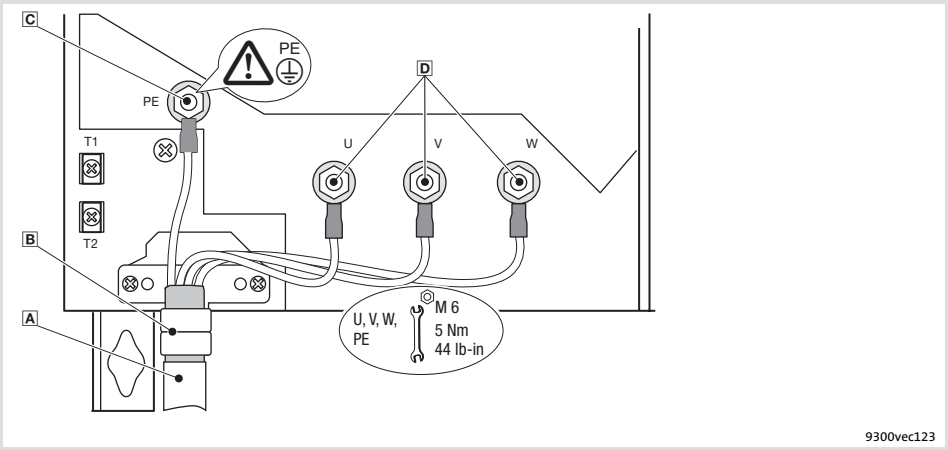

Fig. 5.5-7 Motor connection with KTY thermal sensor

- A Motor cable
- B Shield connection
  Clamp the motor cable shield with the straps. If required, fix by means of cable tie.
- C PE stud
  PE cable connection with ring cable lug
- D U, V, W
  Motor cable connection
  Check the correct polarity. Observe maximum length of the motor cable.
  Max. connectable cable cross-section: 50 mm^2 with ring cable lug

5.6 Standard devices in the power range of 55 kW

5.6.1 Wiring according to EMC (CE-typical drive system)

The drives comply with the EC Directive on ”Electromagnetic Compatibility” if they are installed in accordance with the specifications for the CE-typical drive system. The user is responsible for the compliance of the machine application with the EC Directive.

Note!

Observe the notes given in the chapter ”Basics for wiring according to EMC”!

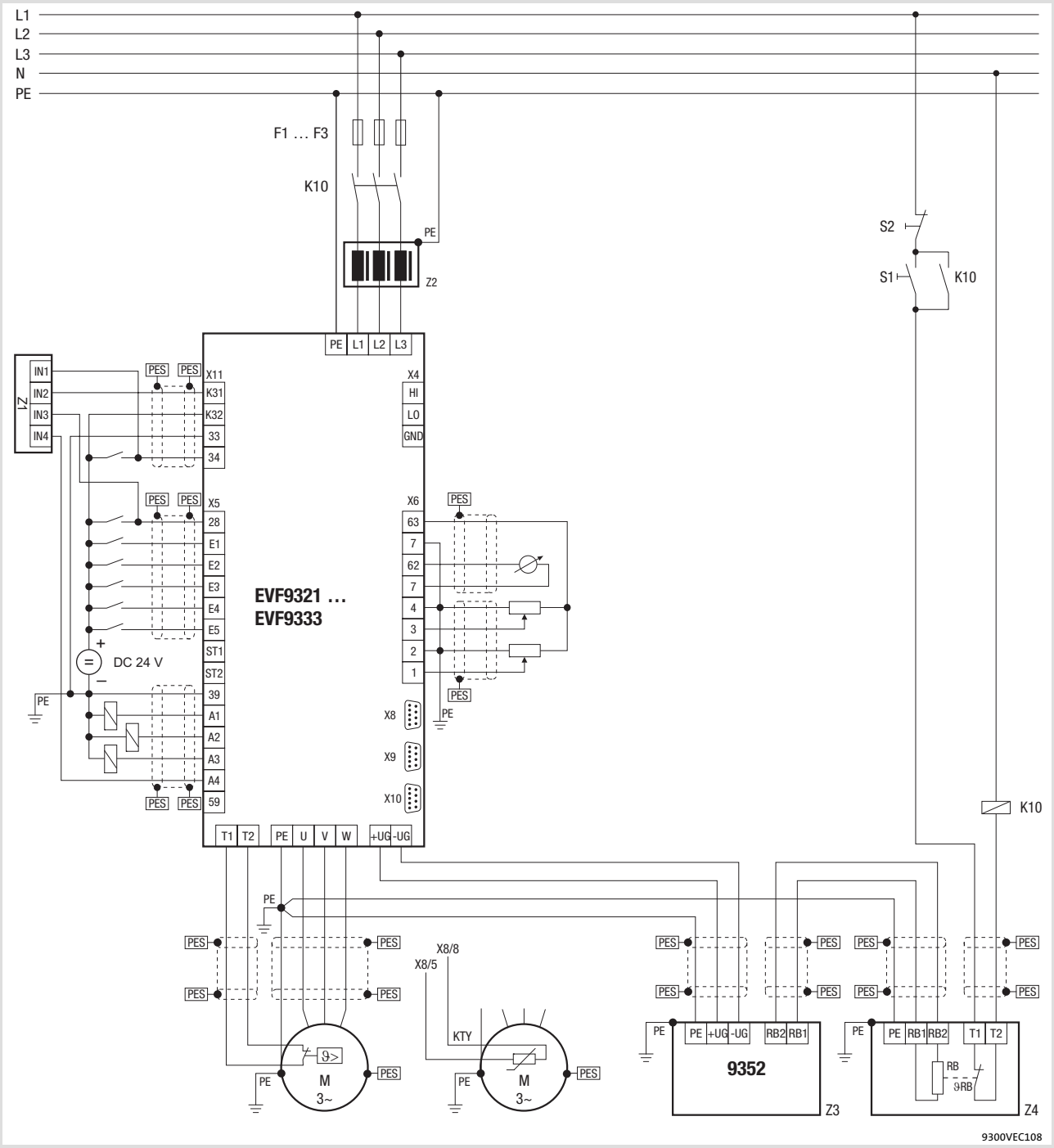

Fig. 5.6-1 Example for wiring in accordance with EMC regulations

F1 ... F3	Fuses
K10	Mains contactor
Z1	Programmable logic controller (PLC)
Z2	Mains choke or mains filter
Z3	Brake chopper EMB9352-E
Z4	Brake resistor
S1	Mains contactor on
S2	Mains contactor off
$+U_G$, $-U_G$	DC-bus connection
PES	HF shield termination through large-surface connection to PE

5.6.2 Important notes

To gain access to the power connections, remove the cover:

Remove the cover of the drive controller	
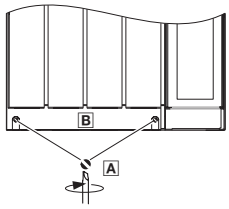	1. Remove the screws A 2. Lift cover B up and detach it

Installation material required from the scope of supply:

Description	Use	Quantity
Cable ties 3.5 × 150 mm	Strain relief/shield connection for motor cable	4

5.6.3 Mains connection, DC supply

Note!

- ► If a mains filter or RFI filter is used and the cable length between mains/RFI filter and drive controller exceeds 300 mm, install a shielded cable.
- ► For DC-bus operation or DC supply, we recommend using shielded DC cables.

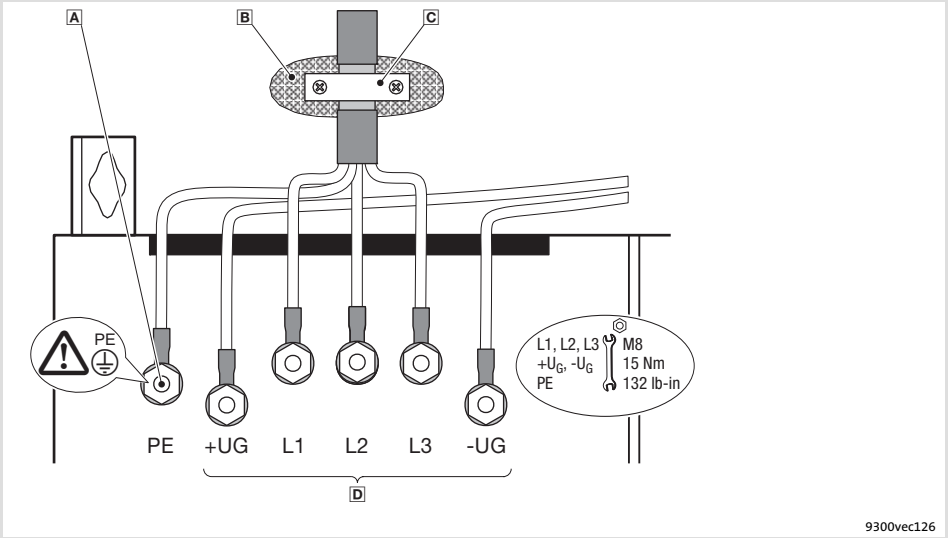

Fig. 5.6-2 Mains connection, DC supply for drive controllers 45 ... 55 kW

A PE stud
Connect PE cable with ring cable lug

B Conductive surface

C Shield clamp
Place shield with large surface on control cabinet mounting plate and fasten with shield clamp (shield clamp is not part of the scope of supply)
To improve the shield connection, also place the shield on the PE stud

D Mains and DC bus connection
L1, L2, L3: Connection of mains cable with ring cable lugs
$+U_G$, $-U_G$: Connection of DC-bus components or connection of the controller in the DC-bus system (see system manual)

5.6.4 Mains connection: Fuses and cable cross-sections

Installation in accordance with EN 60204-1

Supply conditions	
Range	Description
Fuses	● Utilisation category: only gG/gL or gRL
Cables	Laying systems B2 and C: Use of PVC-insulated copper cables, conductor temperature < 70 °C, ambient temperature < 40 °C, no bundling of the cables or cores, three loaded cores. The data are recommendations. Other dimensionings/laying systems are possible (e.g. in accordance with VDE 0298-4).
RCCB	● Controllers can cause a DC current in the PE conductor. If a residual current device (RCD) or a fault current monitoring unit (RCM) is used for protection in the case of direct or indirect contact, only one RCD/RCM of the following type can be used on the current supply side: – Type B (universal-current sensitive) for connection to a three-phase system – Type A (pulse-current sensitive) or type B (universal-current sensitive) for connection to a 1-phase system Alternatively another protective measure can be used, like for instance isolation from the environment by means of double or reinforced insulation, or isolation from the supply system by using a transformer. ● Earth-leakage circuit breakers must only be installed between mains supply and controller.
Observe all national and regional regulations!	

Operation at rated power

9300	Rated fuse current		Cable cross-section		FI [1]
	Fuse	Circuit-breaker	Laying system L1, L2, L3, PE		
			B2	C	
Type	[A]	[A]	[mm²]	[mm²]	[mA]
Operation with mains choke/mains filter					
EVF9330-xV	100	–	–	35	300
EVF9331-xV	125	–	–	35	

[1] Universal current-sensitive earth-leakage circuit breaker

Operation with increased rated power

9300	Rated fuse current		Cable cross-section		FI [1]
	Fuse	Circuit-breaker	Laying system L1, L2, L3, PE		
			B2	C	
Type	[A]	[A]	[mm²]	[mm²]	[mA]
Operation with mains choke/mains filter					
EVF9330-xV	125	–	–	35	300
EVF9331-xV	160	–	–	70	

[1] Universal current-sensitive earth-leakage circuit breaker

Installation to UL

Supply conditions	
Range	Description
Fuses	● Only according to UL 248 ● Mains short-circuit current up to 10000 A_{rms}: All classes permissible ● Mains short-circuit current up to 50000 A_{rms}: Only classes ”J”, ”T” or ”R” permissible
Cables	● Only in accordance with UL ● The cable cross-sections specified in the following apply under the following conditions: – Conductor temperature < 60 °C – Ambient temperature < 40 °C
Observe all national and regional regulations!	

Operation at rated power

9300	Rated fuse current	Cable cross-section
	Fuse	L1, L2, L3, PE
Type	[A]	[AWG]
Operation with mains choke/mains filter		
EVF9330-xV	100	1
EVF9331-xV	125	1/0

5.6.5 Mains choke/mains filter assignment

Operation with rated power (normal operation)

9300	Mains choke	Interference voltage category according to EN 61800-3 and motor cable length			
		Component		Component	
Type		C2	max. [m]	C1	max. [m]
EVF9330-xV	ELN3-0038H085	EZN3A0037H090	25	E82ZN45334B230	10
		E82ZN45334B230	50	EZN3B0037H090	50
EVF9331-xV	ELN3-0027H105-001	EZN3A0030H110	25	E82ZN55334B230	10
		EZN3A0030H110N001 [3)]	25		
		E82ZN55334B230	50	EZN3B0030H110	50

[3)] For controllers with thermal separation

Operation with increased rated power

9300	Mains choke	Interference voltage category according to EN 61800-3 and motor cable length			
		Component		Component	
Type		C2	max. [m]	C1	max. [m]
EVF9330-xV	ELN3-0027H105-001	EZN3A0030H110	25	E82ZN55334B230	10
				EZN3B0030H110N001 [3)]	25
		E82ZN55334B230	50	EZN3B0030H110	50
EVF9331-xV	ELN3-0027H105-001	EZN3A0030H110	25	EZN3B0030H110	50
		EZN3A0030H110N001 [3)]	25		

[3)] For controllers with thermal separation

5.6.6 Motor connection

Note!

- ► Fusing the motor cable is not required.
- ► The drive controller features 2 connections for motor temperature monitoring:
  - – Terminals T1, T2 for connecting a PTC thermistor or thermal contact (NC contact).
  - – Pins X8/5 and X8/8 of the incremental encoder input (X8) for connecting a KTY thermal sensor.

Motor with PTC thermistor or thermal contact (NC contact)

Wire T1, T2 only if the motor is equipped with a PTC thermistor or thermal contact (NC contact).

► An ”open” cable acts like an antenna and can cause faults on the drive controller.

Danger!

- ► All control terminals only have basic insulation (single isolating distance) after connecting a PTC thermistor or a thermal contact.
- ► Protection against accidental contact in case of a defective isolating distance is only guaranteed through external measures, e.g. double insulation.

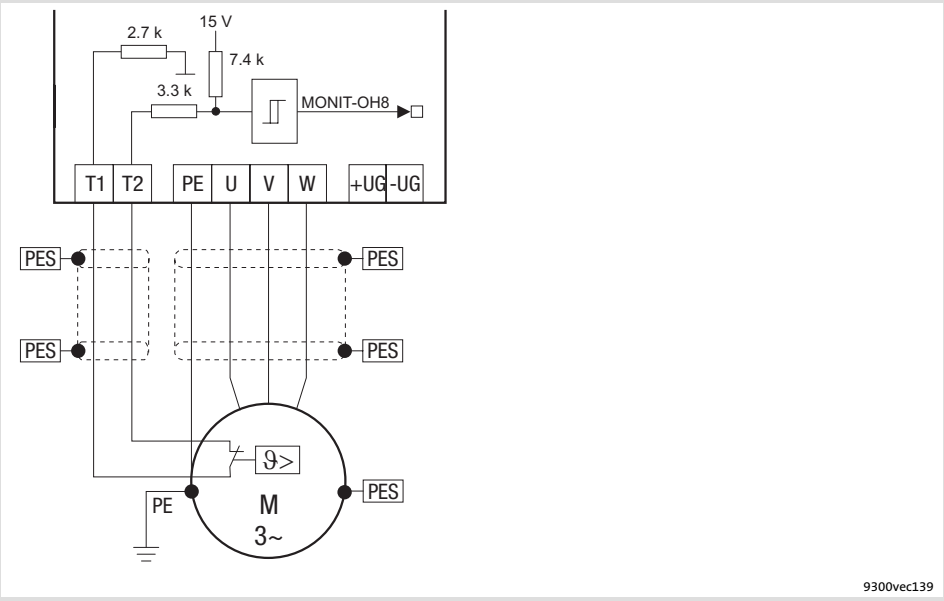

Fig. 5.6-3 Circuit diagram of motor connection with PTC thermistor or thermal contact (NC contact) at T1, T2

Characteristics of the connection for motor temperature monitoring:

Terminals T1, T2	
Connection	● PTC thermistor – PTC thermistor with defined tripping temperature (acc. to DIN 44081 and DIN 44082) ● Thermal contact (NC contact) – Thermostat as NC contact
Tripping point	● Fixed (depending on the PTC/thermal contact) ● PTC: $R\vartheta > 1600\ \Omega$ ● Configurable as warning or error (TRIP)
Notes	● Monitoring is not active in the Lenze setting. ● If you do not use a Lenze motor, we recommend the use of a PTC thermistor up to 150°C.

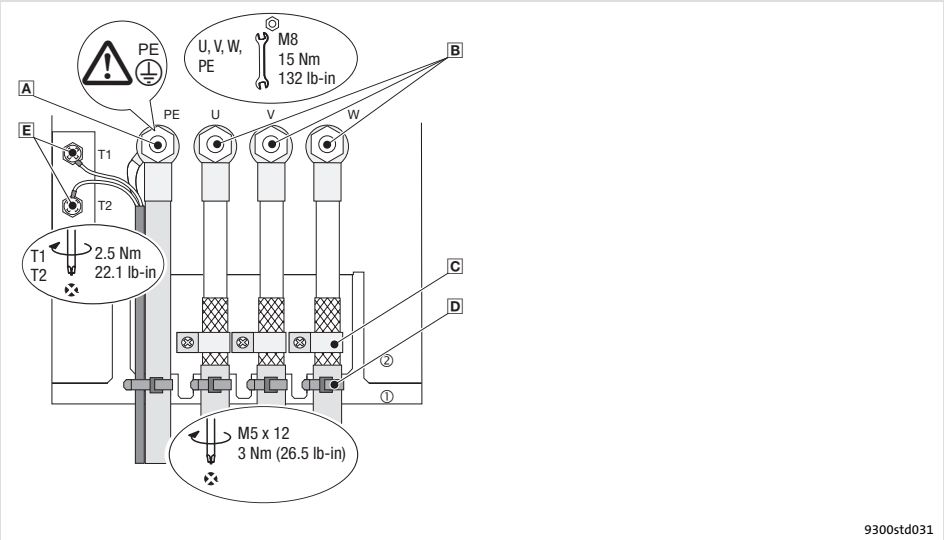

Fig. 5.6-4 Motor connection with PTC thermistor or thermal contact (NC contact)

A PE stud
PE cable connection with ring cable lug

B U, V, W
Motor cable connection
Check the correct polarity. Observe maximum length of the motor cable.
Max. connectable cable cross-section: 120 mm^2 with ring cable lug

C Shield clamps
Place shields of motor cable with large surface on the shield sheet and fasten with shield clamps and M5 × 12 mm screws

D Cable ties
Strain relief of motor cable

E T1, T2 for motor temperature monitoring
Cable connection for PTC thermistors or thermal contacts (NC contacts)
Place shield with large surface on PE stud

Motor with KTY thermal sensor

Note!

- ► We recommend to use Lenze system cables for wiring.
- ► For self-made cables only use cables with shielded cores twisted in pairs.

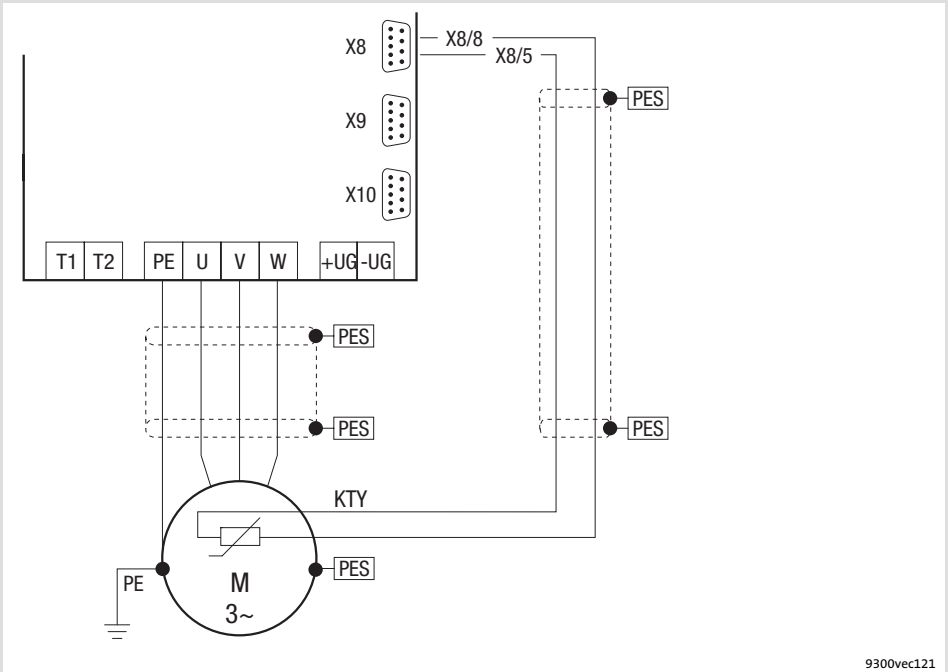

Fig. 5.6-5 Circuit diagram of motor connection with KTY thermal sensor at incremental encoder input X8

Characteristics of the connection for motor temperature monitoring:

Pins X8/5, X8/8 of incremental encoder input (X8)	
Connection	Linear KTY thermal sensor
Tripping point	• Warning: Adjustable • Error (TRIP): Fixed at 150 °C
Notes	• Monitoring is not active in the Lenze setting. • The KTY thermal sensor is monitored with regard to interruption and short circuit.

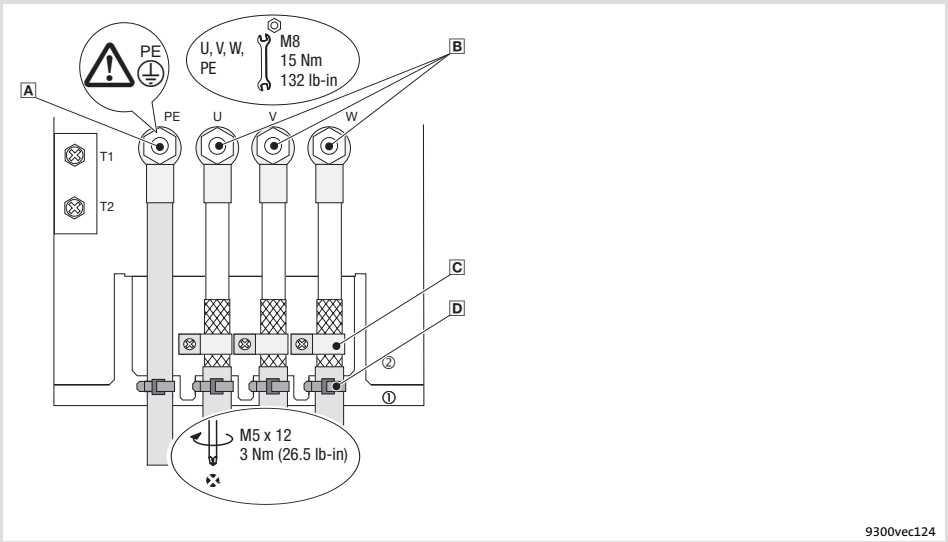

Fig. 5.6-6 Motor connection with KTY thermal sensor

- **A** PE stud
  PE cable connection with ring cable lug
- **B** U, V, W
  Motor cable connection
  Check the correct polarity. Observe maximum length of the motor cable.
  Max. connectable cable cross-section: 120 mm^2 with ring cable lug
- **C** Shield clamps
  Place shields of motor cable with large surface on the shield sheet and fasten with shield clamps and M5 × 12 mm screws
- **D** Cable ties
  Strain relief of motor cable

5.7 Standard devices in the power range 75 ... 90 kW

5.7.1 Wiring according to EMC (CE-typical drive system)

The drives comply with the EC Directive on ”Electromagnetic Compatibility” if they are installed in accordance with the specifications for the CE-typical drive system. The user is responsible for the compliance of the machine application with the EC Directive.

Note!

Observe the notes given in the chapter ”Basics for wiring according to EMC”!

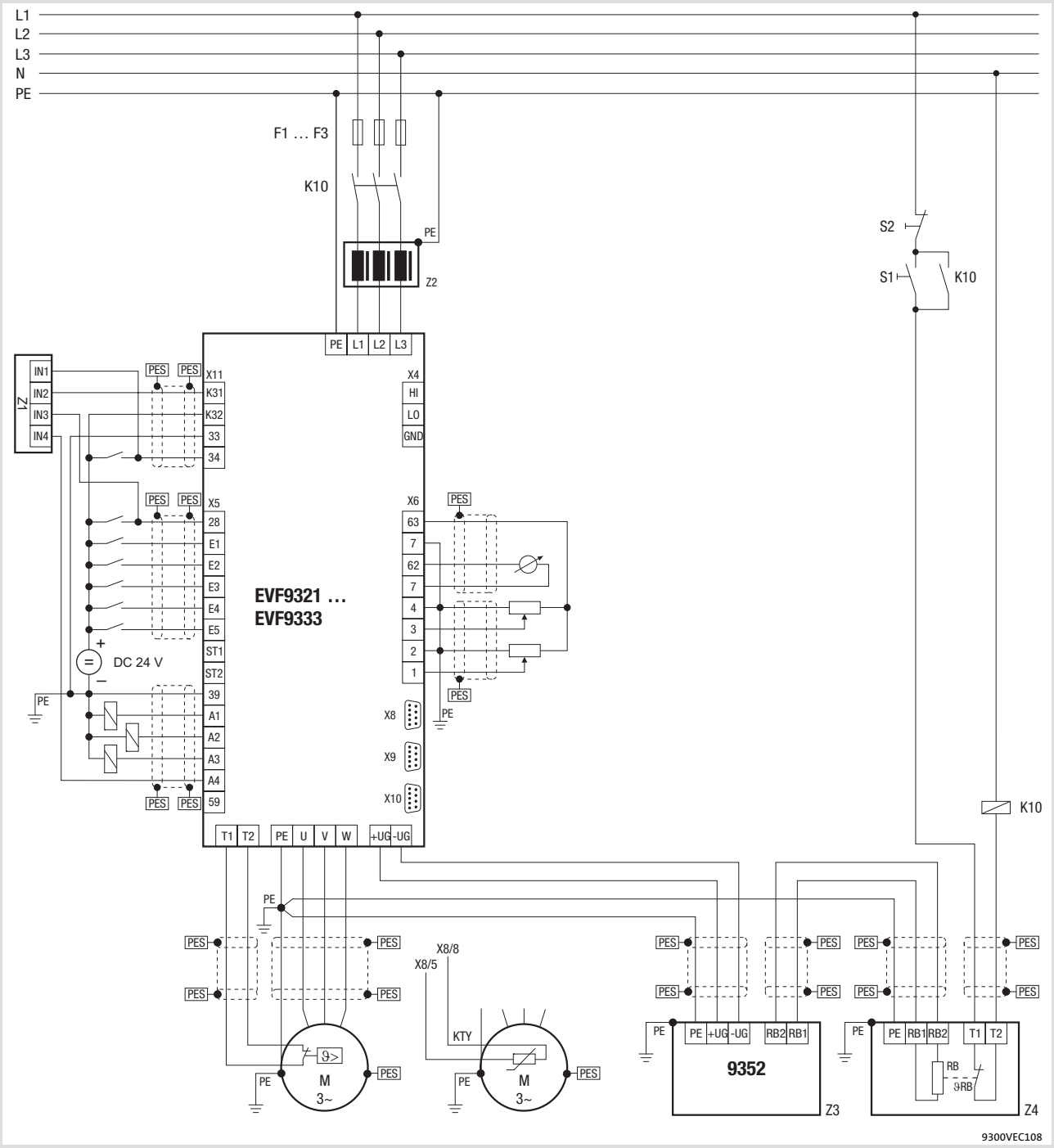

Fig. 5.7-1 Example for wiring in accordance with EMC regulations

F1 ... F3	Fuses
K10	Mains contactor
Z1	Programmable logic controller (PLC)
Z2	Mains choke or mains filter
Z3	Brake chopper EMB9352-E
Z4	Brake resistor
S1	Mains contactor on
S2	Mains contactor off
$+U_G$, $-U_G$	DC-bus connection
PES	HF shield termination through large-surface connection to PE

5.7.2 Important notes

To gain access to the power connections, remove the cover:

Remove the cover of the drive controller	
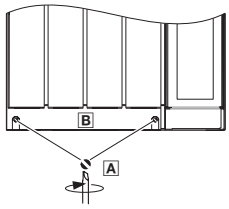	1. Remove the screws A 2. Lift cover B up and detach it

Installation material required from the scope of supply:

Description	Use	Quantity
Cable ties 3.5 × 150 mm	Strain relief/shield connection for motor cable	4

5.7.3 Mains connection, DC supply

Note!

- ► If a mains filter or RFI filter is used and the cable length between mains/RFI filter and drive controller exceeds 300 mm, install a shielded cable.
- ► For DC-bus operation or DC supply, we recommend using shielded DC cables.

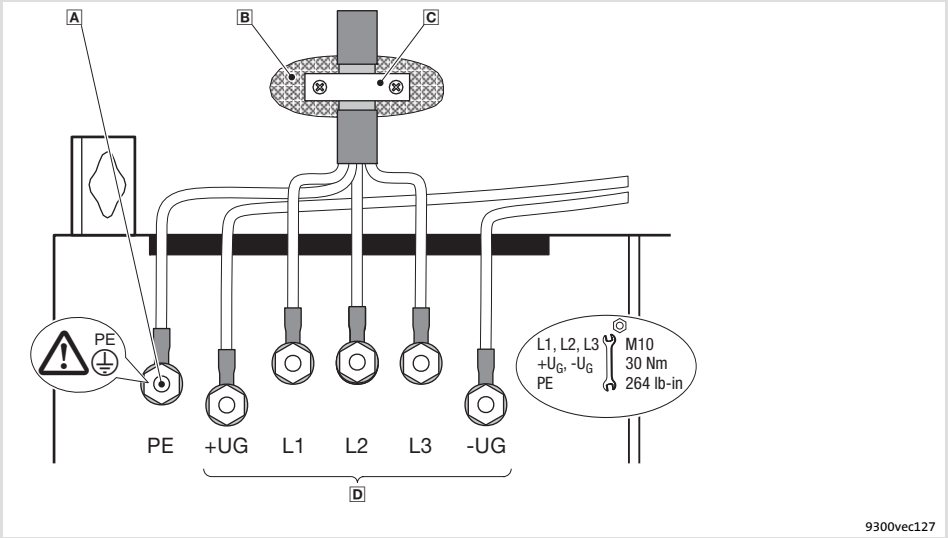

Fig. 5.7-2 Mains connection, DC supply for drive controllers 75 ... 90 kW

A PE stud
Connect PE cable with ring cable lug

B Conductive surface

C Shield clamp
Place shield with large surface on control cabinet mounting plate and fasten with shield clamp (shield clamp is not part of the scope of supply)
To improve the shield connection, also place the shield on the PE stud

D Mains and DC bus connection
L1, L2, L3: Connection of mains cable with ring cable lugs
$+U_G$, $-U_G$: Connection of DC-bus components or connection of the controller in the DC-bus system (see system manual)

5.7.4 Mains connection: Fuses and cable cross-sections

Installation in accordance with EN 60204-1

Supply conditions	
Range	Description
Fuses	● Utilisation category: only gG/gL or gRL
Cables	Laying systems B2 and C: Use of PVC-insulated copper cables, conductor temperature < 70 °C, ambient temperature < 40 °C, no bundling of the cables or cores, three loaded cores. The data are recommendations. Other dimensionings/laying systems are possible (e.g. in accordance with VDE 0298-4).
RCCB	● Controllers can cause a DC current in the PE conductor. If a residual current device (RCD) or a fault current monitoring unit (RCM) is used for protection in the case of direct or indirect contact, only one RCD/RCM of the following type can be used on the current supply side: – Type B (universal-current sensitive) for connection to a three-phase system – Type A (pulse-current sensitive) or type B (universal-current sensitive) for connection to a 1-phase system Alternatively another protective measure can be used, like for instance isolation from the environment by means of double or reinforced insulation, or isolation from the supply system by using a transformer. ● Earth-leakage circuit breakers must only be installed between mains supply and controller.
Observe all national and regional regulations!	

Operation at rated power

9300	Rated fuse current		Cable cross-section		FI [1]
	Fuse	Circuit-breaker	Laying system L1, L2, L3, PE		
			B2	C	
Type	[A]	[A]	[mm²]	[mm²]	[mA]
Operation with mains choke/mains filter					
EVF9332-xV	160	–	–	70	300
EVF9333-xV	200	–	–	95	

[1] Universal current-sensitive earth-leakage circuit breaker

Operation with increased rated power

9300	Rated fuse current		Cable cross-section		FI [1]
	Fuse	Circuit-breaker	Laying system L1, L2, L3, PE		
			B2	C	
Type	[A]	[A]	[mm²]	[mm²]	[mA]
Operation with mains choke/mains filter					
EVF9332-xV	200	–	–	95	300
EVF9333-xV	250	–	–	120	

[1] Universal current-sensitive earth-leakage circuit breaker

Installation to UL

Supply conditions	
Range	Description
Fuses	● Only according to UL 248 ● Mains short-circuit current up to 10000 A_{rms}: All classes permissible ● Mains short-circuit current up to 50000 A_{rms}: Only classes ”J”, ”T” or ”R” permissible
Cables	● Only in accordance with UL ● The cable cross-sections specified in the following apply under the following conditions: – Conductor temperature < 60 °C – Ambient temperature < 40 °C
Observe all national and regional regulations!	

Operation at rated power

9300	Rated fuse current	Cable cross-section
	Fuse	L1, L2, L3, PE
Type	[A]	[AWG]
Operation with mains choke/mains filter		
EVF9332-xV	175	2/0
EVF9333-xV	200	3/0

5.7.5 Mains choke/mains filter assignment

Operation with rated power (normal operation)

9300	Mains choke	Interference voltage category according to EN 61800-3 and motor cable length			
		Component		Component	
Type		C2	max. [m]	C1	max. [m]
EVF9332-xV	ELN3-0022H130	EZN3A0022H150	25	E82ZN75334B230	10
		E82ZN75334B230	50	EZN3B0022H150	50
EVF9333-xV	ELN3-0017H170	EZN3A0017H200	25	E82ZN90334B230	10
		E82ZN90334B230	50	EZN3B0017H200	50

Operation with increased rated power

9300	Mains choke	Interference voltage category according to EN 61800-3 and motor cable length			
		Component		Component	
Type		C2	max. [m]	C1	max. [m]
EVF9332-xV	ELN3-0017H170	EZN3A0017H200	25	E82ZN90334B230	10
		E82ZN90334B230	50	EZN3B0017H200	50
EVF9333-xV	ELN3-0014H200	EZN3A0015H230	25	EZN3B0015H230	50
		EZN3A0017H200	25	EZN3B0017H200	50

5.7.6 Motor connection

Note!

- ► Fusing the motor cable is not required.
- ► The drive controller features 2 connections for motor temperature monitoring:
  - – Terminals T1, T2 for connecting a PTC thermistor or thermal contact (NC contact).
  - – Pins X8/5 and X8/8 of the incremental encoder input (X8) for connecting a KTY thermal sensor.

Motor with PTC thermistor or thermal contact (NC contact)

Wire T1, T2 only if the motor is equipped with a PTC thermistor or thermal contact (NC contact).

- ► An ”open” cable acts like an antenna and can cause faults on the drive controller.

Danger!

- ► All control terminals only have basic insulation (single isolating distance) after connecting a PTC thermistor or a thermal contact.
- ► Protection against accidental contact in case of a defective isolating distance is only guaranteed through external measures, e.g. double insulation.

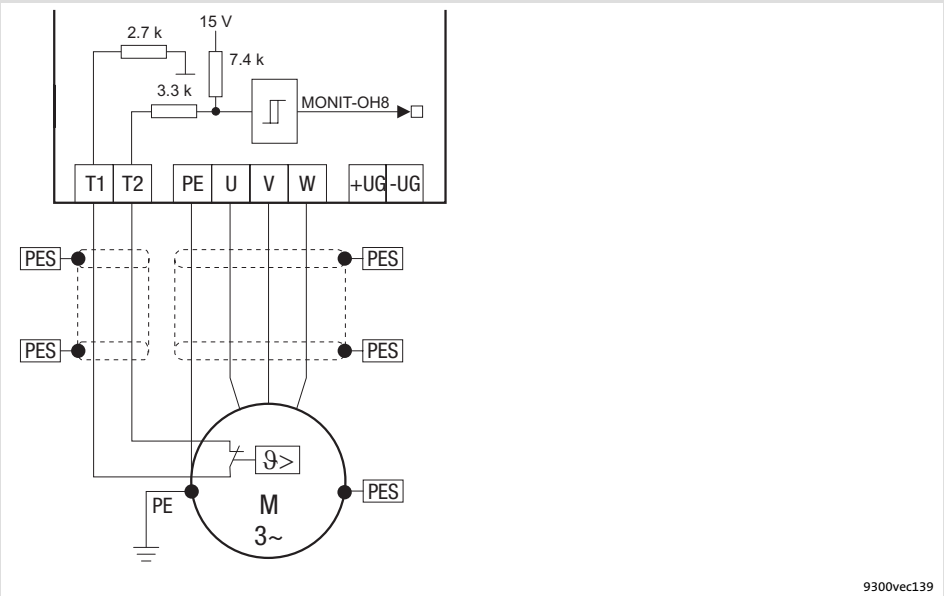

Fig. 5.7-3 Circuit diagram of motor connection with PTC thermistor or thermal contact (NC contact) at T1, T2

Characteristics of the connection for motor temperature monitoring:

Terminals T1, T2	
Connection	● PTC thermistor – PTC thermistor with defined tripping temperature (acc. to DIN 44081 and DIN 44082) ● Thermal contact (NC contact) – Thermostat as NC contact
Tripping point	● Fixed (depending on the PTC/thermal contact) ● PTC: $R\vartheta > 1600\ \Omega$ ● Configurable as warning or error (TRIP)
Notes	● Monitoring is not active in the Lenze setting. ● If you do not use a Lenze motor, we recommend the use of a PTC thermistor up to 150°C.

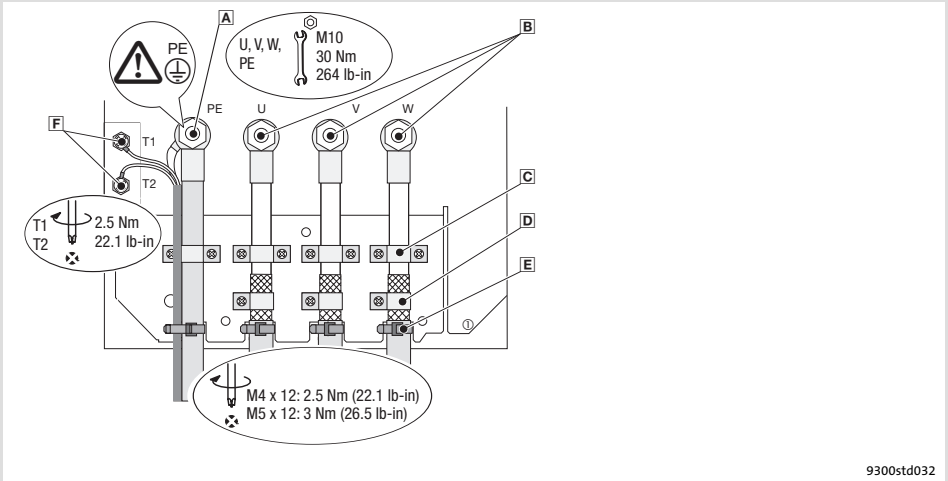

Fig. 5.7-4 Motor connection with PTC thermistor or thermal contact (NC contact)

A PE stud
PE cable connection with ring cable lug

B U, V, W
Motor cable connection
Check the correct polarity. Observe maximum length of the motor cable.
Max. connectable cable cross-section: 240 mm^2 with ring cable lug

C Cable clamps for strain relief of motor cable
Fasten cable clamps with M4 × 12 mm screws

D Shield clamps
Place shields of motor cable with large surface on the shield sheet and fasten with shield clamps and M5 × 12 mm screws

E Cable ties for additional strain relief of motor cable

F T1, T2 for motor temperature monitoring
Cable connection for PTC thermistors or thermal contacts (NC contacts)
Place shield with large surface on PE stud

Motor with KTY thermal sensor

Note!

- ► We recommend to use Lenze system cables for wiring.
- ► For self-made cables only use cables with shielded cores twisted in pairs.

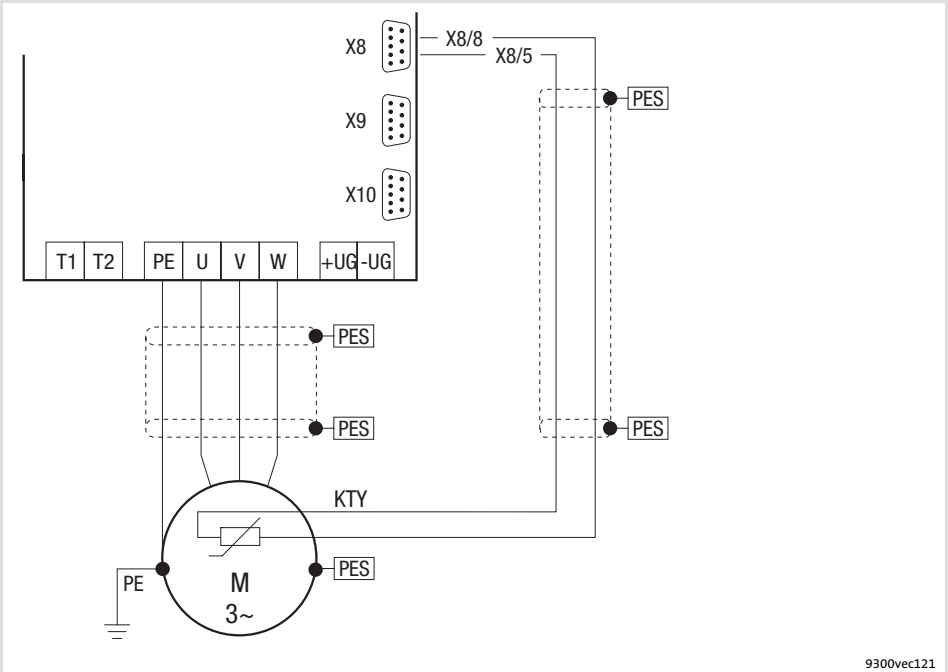

Fig. 5.7-5 Circuit diagram of motor connection with KTY thermal sensor at incremental encoder input X8

Characteristics of the connection for motor temperature monitoring:

Pins X8/5, X8/8 of incremental encoder input (X8)	
Connection	Linear KTY thermal sensor
Tripping point	• Warning: Adjustable • Error (TRIP): Fixed at 150 °C
Notes	• Monitoring is not active in the Lenze setting. • The KTY thermal sensor is monitored with regard to interruption and short circuit.

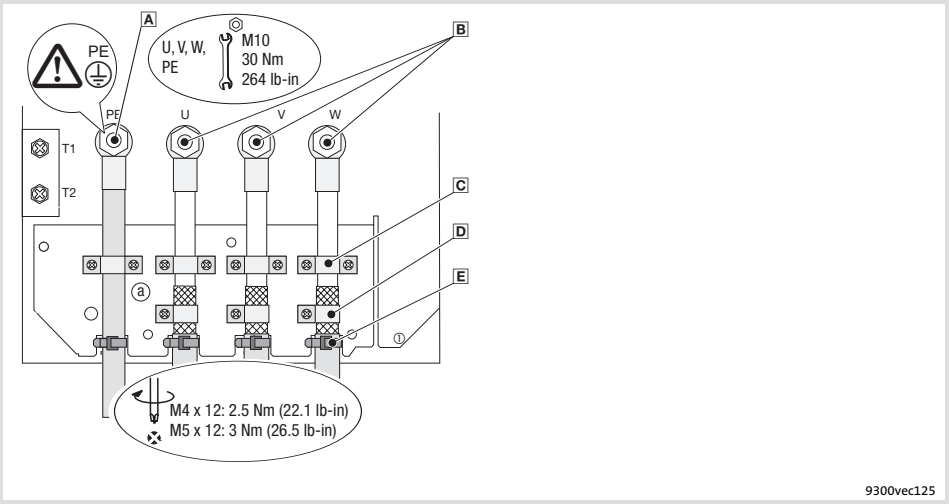

Fig. 5.7-6 Motor connection with KTY thermal sensor

- **A** PE stud
  PE cable connection with ring cable lug
- **B** U, V, W
  Motor cable connection
  Check the correct polarity. Observe maximum length of the motor cable.
  Max. connectable cable cross-section: 240 mm^2 with ring cable lug
- **C** Shield clamps
  Place shields of motor cable with large surface on the shield sheet and fasten with shield clamps and M5 × 12 mm screws
- **D** Cable ties
  Strain relief of motor cable

5.8 Control terminals

5.8.1 Important notes

Stop!

The control card will be damaged if

- ► the voltage between X5/39 and PE or X6/7 and PE is greater than 50 V,
- ► the voltage between voltage source and X6/7 exceeds 10 V (common mode) in case of supply via external voltage source.

Limit the voltage before switching on the drive controller:

- ► Connect X5/39, X6/2, X6/4 and X6/7 directly to PE or
- ► use voltage-limiting components.

► For trouble-free operation, the control cables must be shielded:

- – Connect the shield of digital input and output cables at both ends.
- – Connect the shield of analog input and output cables at one end (at the drive controller).
- – For lengths of 200 mm and more, use only shielded cables for analog and digital inputs and outputs. Under 200 mm, unshielded but twisted cables may be used.

Installation material required from the scope of supply:

Description	Use	Quantity
Shield sheet	Shield connection for control cables	1
Screw M4 × 10 mm (DIN 7985)	Shield sheet fastening	1
Terminal strip, 4-pole (only for variants V004 and V024)	Connection of safety relay K_{SR} at X11	1
Terminal strip, 7-pole	Connection of digital inputs and outputs at X5	2
Terminal strip, 4-pole	Connection of analog inputs and outputs at X6	2

How to connect the shield

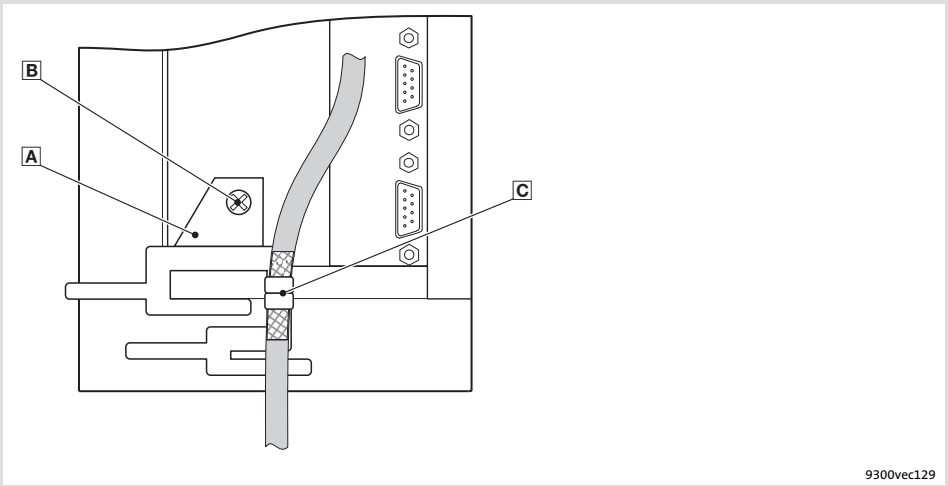

Fig. 5.8-1 Connection of cable shield to shield sheet

- A Shield sheet
- B Fasten shield sheet with M4 × 10 mm screw at the bottom of the control card
- C Securely clamp cable shield with lugs

Terminal data

Stop!

- ► Connect or disconnect the terminal strips only if the controller is disconnected from the mains!
- ► Wire the terminal strips before connecting them!
- ► Unused terminal strips must also be plugged on to protect the contacts.

Cable type		Wire end ferrule	Maximum cable cross-section	Tightening torque	Stripping length
	Rigid	–	2.5 mm² (AWG 14)	0.5 ... 0.6 Nm (4.4 ... 5.3 lb-in)	5 mm
	Flexible	Without wire end ferrule	2.5 mm² (AWG 14)		
	Flexible	Wire end ferrule without plastic sleeve	2.5 mm² (AWG 14)		
	Flexible	Wire end ferrule with plastic sleeve	2.5 mm² (AWG 14)		

5.8.2 Connection terminal of the control card

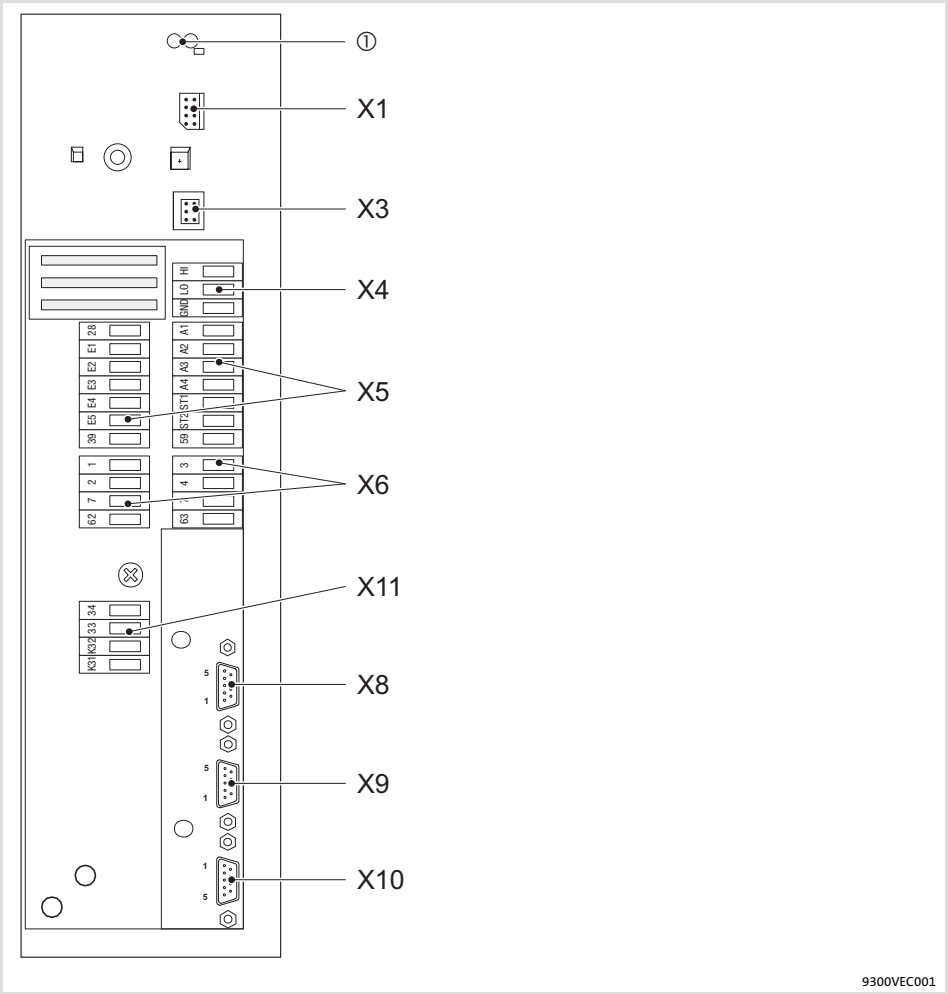

Fig. 5.8-2 Connection terminal of the control card

①	2 light-emitting diodes (red, green) for status display
X1	Automation interface (AIF) Slot for communication modules (e.g. keypad XT)
X3	Preselection of signal type with jumper for input signal at X6/1, X6/2
X4	Connection for system bus (CAN), terminal strip
X5	Connection for digital inputs and outputs, terminal strips
X6	Connection for analog inputs and outputs, terminal strips
X8	Connection for incremental encoder connector: male, 9-pole, Sub-D
X9	Connection for digital frequency input signal connector: male, 9-pole, Sub-D
X10	Connection for digital frequency output signal connector: female, 9-pole, Sub-D
X11	Connection for safety relay K_{SR}, terminal strip

5.8.3 Device variant without "Safe torque off" function

Internal voltage supply

- ► For the supply of the digital inputs (X5/E1 ... X5/E5) you have to set a freely assignable digital output (e. g. X5/A1) permanently to HIGH level.
- ► For the supply of the analog inputs (X6/1, X6/2 and X6/3, X6/4) you have to set a freely assignable analog output (e. g. X6/63) permanently to HIGH level.

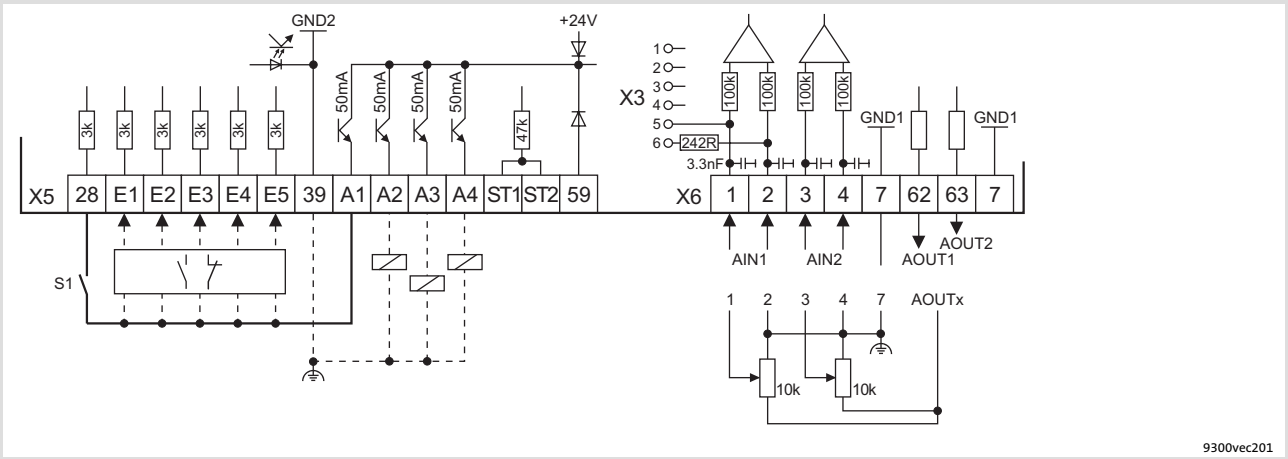

Fig. 5.8-3 Wiring of digital and analog inputs/outputs for internal voltage source

S1 Controller enable
NO contact or NC contact
Load
Minimum wiring required for operation
Terminal assignment in the Lenze setting: 📖 5.8-8

Supply via external voltage source

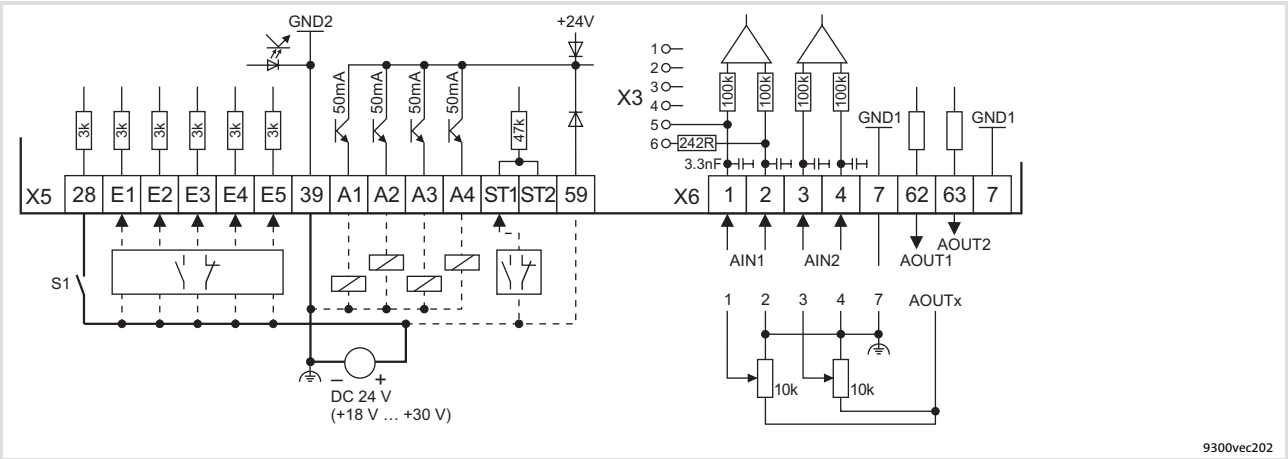

Fig. 5.8-4 Wiring of digital and analog inputs/outputs for external voltage source

S1 Controller enable
NO contact or NC contact
Load
Minimum wiring required for operation
Terminal assignment in the Lenze setting: 📖 5.8-8

5.8.4 Device variant with ”Safe torque off” function

Safety instructions for the installation of the ”Safe torque off” function

- The installation and commissioning of the “Safe torque off” function must be carried out by skilled personnel only.
- All safety-relevant cables (e.g. control cable for the safety relay, feedback contact) outside the control cabinet must be protected, for instance by a cable duct. Short circuits between the single cables must be ruled out!
- Wiring of the safety relay K_{SR} with insulated wire end ferrules or rigid cables is absolutely vital.
- The electrical reference point for the coil of the safety relay K_{SR} must be connected with the protective conductor system (DIN EN 60204-1 paragraph 9.4.3). Only this measure guarantees that the operation is protected against earth faults.

Tip!

A complete description can be found in the chapter ”Safe torque off”.

Internal voltage supply

► If a freely assignable digital output (e.g. X5/A1) is assigned permanently to HIGH level, it serves as an internal voltage source. Every output has a maximum load capacity of 50 mA.

– The relay K_{SR} and two digital inputs (X5/28 and e.g. X5/E1) can be supplied with voltage via a digital output.

– Two digital outputs must be connected in parallel and assigned permanently to HIGH level in order to obtain the maximum wiring (relays K_{SR} and X5/E1 ... X5/E5, X5/ST1).

► For the supply of the analog inputs (X6/1, X6/2 and X6/3, X6/4) you have to set a freely assignable analog output (e. g. X6/63) permanently to HIGH level.

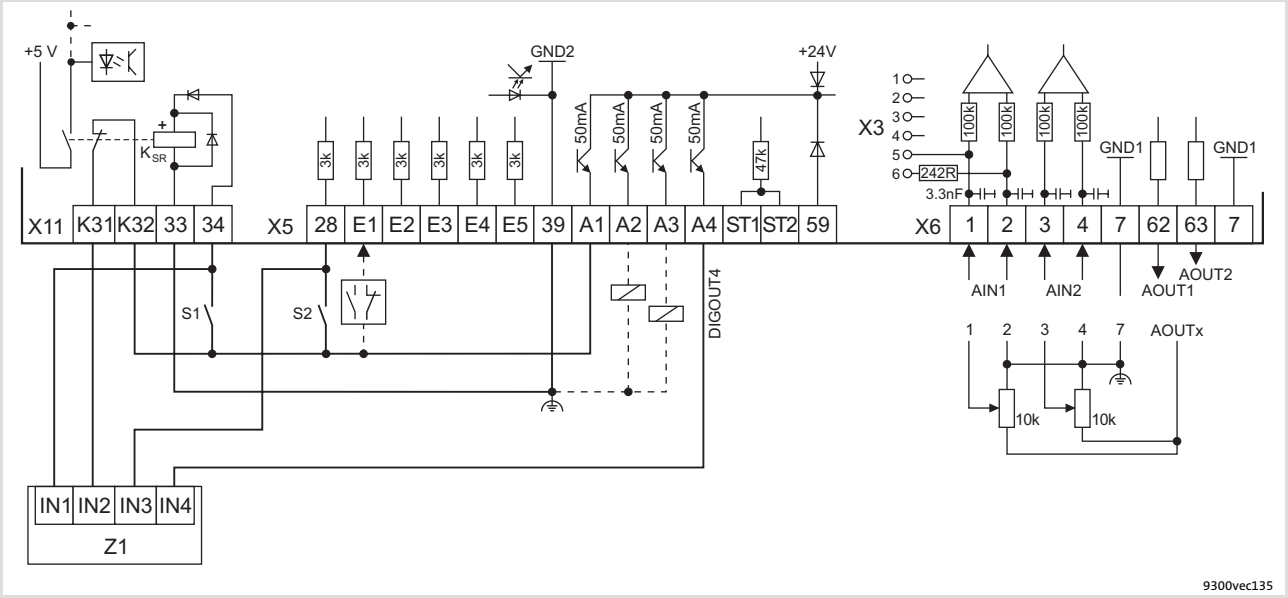

Fig. 5.8-5 Wiring of digital and analog inputs/outputs with active ”Safe torque off” function and internal voltage source

S1 Deactivate pulse inhibit (1st disconnecting path)
S2 Enable controller (2nd disconnecting path)
Z1 Programmable logic controller (PLC)
The PLC monitors the ”Safe torque off” function
X5/A4 Feedback via a digital output (e. g. DIGOUT4)
NO contact or NC contact
Load
Minimum wiring required for operation
Terminal assignment in the Lenze setting: 📖 5.8-8

Note!

If you load a basic configuration C0005 = xx1x (e.g. 1010 for speed control with control via terminals), the following terminals are switched to a fixed signal level:

► Terminal X5/A1 to FIXED1 (corresponds to DC 24 V).

► Terminal X6/63 to FIXED100% (corresponds to 10 V).

Supply via external voltage source

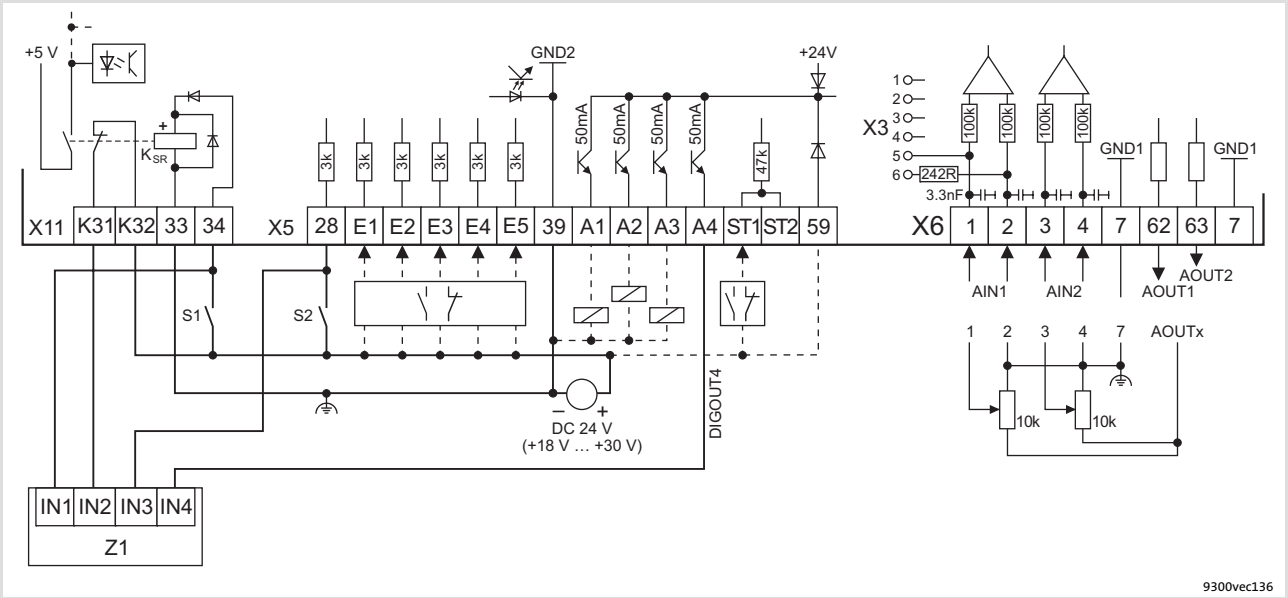

Fig. 5.8-6 Wiring of digital and analog inputs/outputs with active "Safe torque off" function and external voltage source

S1 Deactivate pulse inhibit (1st disconnecting path)
S2 Enable controller (2nd disconnecting path)
Z1 Programmable logic controller (PLC)
The PLC monitors the "Safe torque off" function
X5/A4 Feedback via a digital output (e. g. DIGOUT4)
NO contact or NC contact
Load
Minimum wiring required for operation
Terminal assignment in the Lenze setting: 📖 5.8-8

Note!

Supplying the digital inputs via an external voltage source enables a **backup operation in the case of mains failure**. After switching off the mains voltage, all actual values are continued to be detected and processed.

- ► Connect the positive pole of the external voltage source with X5/59 to establish the backup operation in the event of mains failure.
- ► The external voltage source must be able to supply a current ≥ 1 A.
- ► The starting current of the external voltage source is not limited by the controller. Lenze recommends the use of voltage sources with current limitation or with an internal impedance of Z > 1 Ω.

5.8.5 Terminal assignment

Terminal		Function Bold print = **Lenze setting**		Level / state	Technical data
X11/K32 X11/K31	Safety relay K_{SR} 1st disconnecting path	Feedback - pulse inhibit		Open contact: Pulse inhibit is inactive (operation) Closed contact: Pulse inhibit is active	See chapter "Technical data"
X11/33		– coil of safety relay K_{SR}		Coil is not carrying any current: Active pulse inhibit	
X11/34		+ coil of safety relay K_{SR}		Coil is carrying current: Inactive pulse inhibit (operation)	
X5/28	Controller inhibit (DCTRL-CINH) 2nd disconnecting path	Controller enable/inhibit		LOW: Controller inhibited HIGH: Controller enabled	LOW: 0 ... +3 V HIGH: +12 ... +30 V Input current at +24 V: 8 mA per input Reading and processing the input signals - 1/ms (mean value)
X5/E1	Digital inputs (freely assignable)	**Deactivate CW rotation / quick stop**		HIGH	
X5/E2		**Deactivate CCW rotation / quick stop**		HIGH	
X5/E3		**Activate fixed frequency 1 (JOG1)**		HIGH	
X5/E4		**Set error message (TRIP SET)**		LOW	
X5/E5		**Reset error message (TRIP RESET)**		LOW-HIGH edge	
X5/ST1 X5/ST2		Additional digital input (E6)		HIGH	
X5/A1	Digital outputs (freely assignable)	**Error message present**		LOW	LOW: 0 ... +3 V HIGH: +12 ... +30 V Load capacity: Max. 50 mA per output (load resistance at least 480 Ω at +24 V) Update of the output signals - 1/ms
X5/A2		**Switching threshold Q_{MIN}: Actual speed < setpoint speed in C0017**		LOW	
X5/A3		**Ready for operation (DCTRL-RDY)**		HIGH	
X5/A4		**Maximum current reached (DCTRL-IMAX)**		HIGH	
X5/39	–	GND2, reference potential for digital signals		–	Isolated against GND1
X5/59	–	Connection of external voltage source for backup operation of the drive controller in case of mains failure		DC 24 V (+18 ... +30 V)	Current consumption: Max. 1 A at 24 V
X6/1 X6/2	Analog input 1	Voltage input range **Main setpoint**	 Jumper X3	-10 V ... +10 V	Resolution: 5 mV (11 bits + sign)
		Current input range	 Jumper X3	-20 mA ... +20 mA	Resolution: 20 µA (10 bits + sign)
X6/3 X6/4	Analog input 2	Voltage input range **Not active**	Jumper X3 has no effect	-10 V ... +10 V	Resolution: 5 mV (11 bits + sign)
X6/62	Analog output 1	Monitor 1 **Actual speed value**		-10 V ... +10 V max. 2 mA	Resolution: 20 mV (9 bits + sign)
X6/63	Analog output 2	Monitor 2 **Actual motor current value**		-10 V ... +10 V max. 2 mA	Resolution: 20 mV (9 bits + sign)
X6/7	–	GND1, reference potential for analog signals		–	–

5.9 Wiring of the system bus (CAN)

Wiring

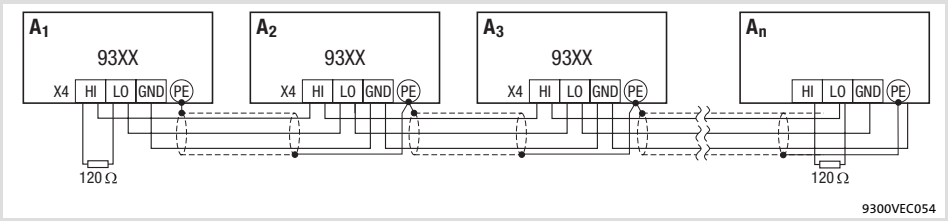

Fig. 5.9-1 System bus (CAN) wiring

A_1	Bus device 1 (controller)
A_2	Bus device 2 (controller)
A_3	Bus device 3 (controller)
A_n	Bus device n (e. g. PLC), n = max. 63
X4/GND	CAN-GND: System bus reference potential
X4/LO	CAN-LOW: System bus LOW (data line)
X4/HI	CAN-HIGH: System bus HIGH (data line)

Stop!

Connect a 120 Ω terminating resistor to the first and last bus device.

We recommend the use of CAN cables in accordance with ISO 11898-2:

CAN cable in accordance with ISO 11898-2	
Cable type	Paired with shielding
Impedance	120 Ω (95 ... 140 Ω)
Cable resistance/cross-section	
Cable length ≤ 300 m	≤ 70 mΩ/m / 0.25 ... 0.34 mm² (AWG22)
Cable length 301 ... 1000 m	≤ 40 mΩ/m / 0.5 mm² (AWG20)
Signal propagation delay	≤ 5 ns/m

5.10 Wiring of the feedback system

5.10.1 Important notes

► An incremental encoder can be connected to input X8 or input X9:
– Incremental encoders with TTL level are connected to X8.
– Incremental encoders with HTL level are connected to X9.

► The incremental encoder signal can be output for slave drives at the digital frequency output X10.

Note!

► We recommend to use Lenze system cables for wiring.
► For self-made cables only use cables with shielded cores twisted in pairs.

Installation material required from the scope of supply:

Description	Use	Quantity
Protective cover	Protection for unused Sub-D connections	4

5.10.2 Incremental encoder with TTL level at X8

Technical data

Field	Values
Connection at drive controller	Connector: Pin, 9-pole, Sub-D
Connectable incremental encoder	Incremental encoder with TTL level ● Encoder with two 5 V complementary signals electrically offset by 90° ● Connection of zero track is possible (optional)
Input frequency	0 ... 500 kHz
Current consumption	6 mA per channel
Internal voltage source (X8/4, X8/5)	5 V DC / max. 200 mA

Wiring

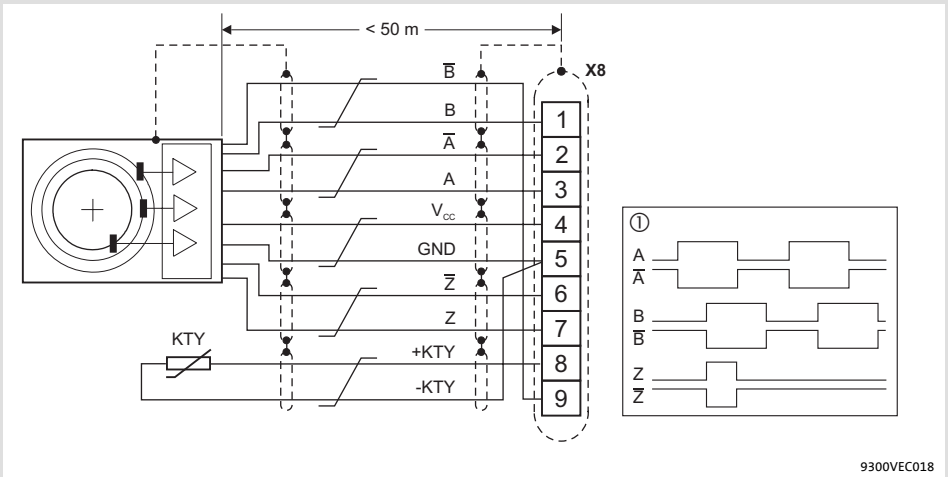

Fig. 5.10-1 Connection of incremental encoder with TTL level (RS-422)

① Signals for CW rotation
Cores twisted in pairs

X8 - Incremental encoder with TTL level Connector: Pin, 9-pole, Sub-D									
Pin	1	2	3	4	5	6	7	8	9
Signal	B	$\overline{A}$	A	V_{CC}	GND (-KTY)	$\overline{Z}$	Z	+KTY	$\overline{B}$
	0.14 mm² (AWG 26)			1 mm² (AWG 18)		0.14 mm² (AWG 26)			

5.10.3 Incremental encoder with HTL level at X9

Technical data

Field	Values
Connection at drive controller	Connector: Pin, 9-pole, Sub-D
Connectable incremental encoder	Incremental encoder with HTL-level ● Two-track with inverse signals and zero track ● Two-track without inverse signals and zero track
Input frequency	0 ... 200 kHz
Current consumption	5 mA per channel
Supply of incremental encoder	External voltage source
Internal voltage source (X9/4, X9/5)	5 V DC / max. 200 mA Total current at X9/4, X9/5 and X10/4, X10/5: max. 200 mA

Wiring

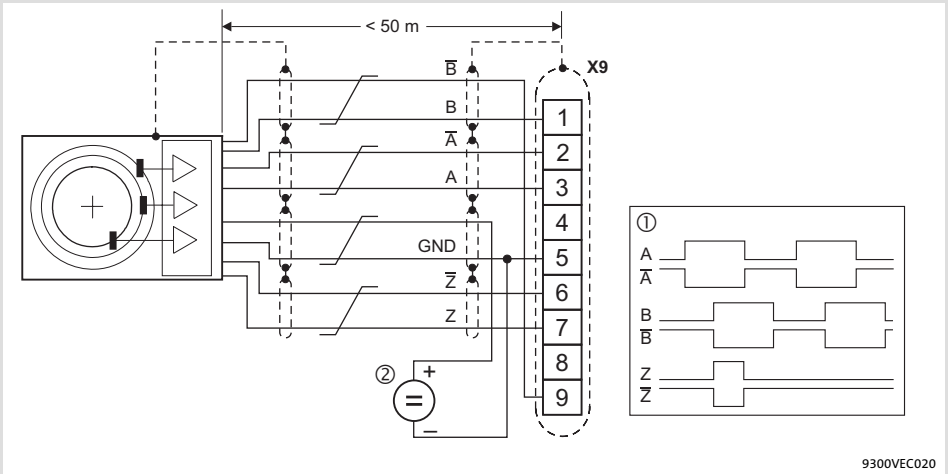

Fig. 5.10-2 Connection of incremental encoder with HTL level

① Signals for CW rotation
② External voltage source for the incremental encoder
Cores twisted in pairs

X9 - Incremental encoder with HTL level Connector: Pin, 9-pole, Sub-D									
Pin	1	2	3	4	5	6	7	8	9
Signal	B	Ā	A	+5 V	GND	Z̄	Z	-	B̄
	0.14 mm² (AWG 26)			1 mm² (AWG 18)		0.14 mm² (AWG 26)			

Note!

Connecting the two-track incremental encoder without inverse signals (at HTL level):

► Set signal A on pin X9/2 (Ā) and signal B on pin X9/9 (B̄).

► Wire pin X9/3 (A) and X9/1) (B) with the positive pole of the external voltage source for the incremental encoder.

5.11 Wiring of digital frequency input / digital frequency output

Installation material required from the scope of supply:

Description	Use	Quantity
Protective cover	Protection for unused Sub-D connections	4

Technical data

Field	Digital frequency output X10
Connection at drive controller	Connector: female, 9-pole, Sub-D
Pin assignment	Dependent on the selected basic configuration
Output frequency	0 ... 500 kHz
Signal	Two-track with inverse 5 V signals (RS422) and zero track
Load capacity	Max. 20 mA per channel (up to 3 slave drives can be connected)
Special features	The ”Enable” output signal at X10/8 switches to LOW if the drive controller is not ready for operation (e.g. disconnected from mains). This may trip SD3 monitoring on the slave drive.
Internal voltage source (X10/4, X10/5)	DC 5 V / max. 50 mA Total current at X9/4, X9/5 and X10/4, X10/5: max. 200 mA

Field	Digital frequency input X9
Connection at drive controller	Connector: male, 9-pole, Sub-D
Input frequency	TTL level: 0 ... 500 kHz HTL level: 0 ... 200 kHz
Signal	Two-track with inverse signals and zero track Two-track without inverse signals and zero track (only for HTL level)
Signal evaluation	Via code C0427
Current consumption	Max. 5 mA
Special features	With activated SD3 monitoring, TRIP or warning is tripped if the ”Lamp Control” input signal at X9/8 switches to LOW. Due to this the drive controller may respond if the master drive is not ready for operation.

Wiring

Note!

- ► We recommend to use Lenze system cables for wiring.
- ► For self-made cables only use cables with shielded cores twisted in pairs.

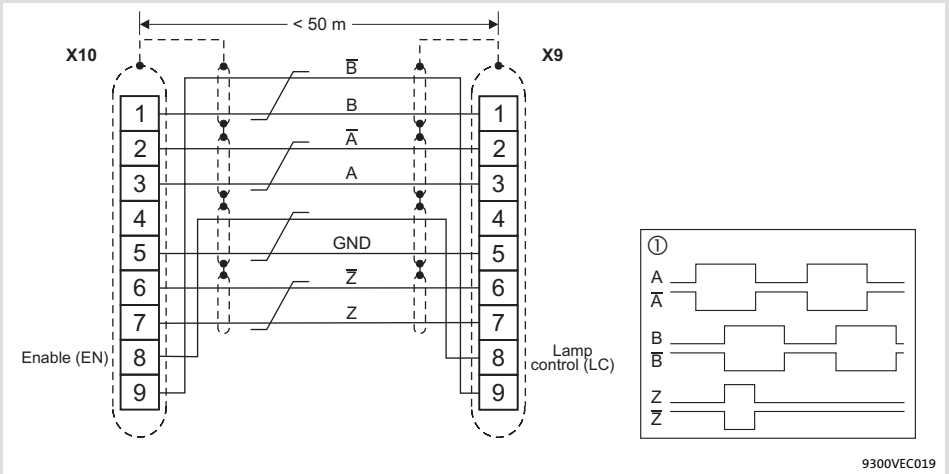

Fig. 5.11-1 Connection of digital frequency input (X9) / digital frequency output (X10)

X9 Slave drive
X10 Master drive
① Signals for CW rotation
Cores twisted in pairs

X9 - Digital frequency input Connector: Pin, 9-pole, Sub-D									
Pin	1	2	3	4	5	6	7	8	9
Signal	B	Ā	A	+5 V	GND	Z̄	Z	LC	B̄
	0.14 mm² (AWG 26)			0.5 mm² (AWG 20)		0.14 mm² (AWG 26)		0.5 mm² (AWG 20)	0.14 mm² (AWG 26)

X10 - Digital frequency output Connector: Socket, 9-pole, Sub-D									
Pin	1	2	3	4	5	6	7	8	9
Signal	B	Ā	A	+5 V	GND	Z̄	Z	EN	B̄
	0.14 mm² (AWG 26)			0.5 mm² (AWG 20)		0.14 mm² (AWG 26)		0.5 mm² (AWG 20)	0.14 mm² (AWG 26)

Adjustment

Evaluation of the input signals at X9		
Code	**Function**	
C0427 = 0	CW rotation	Track A leads track B by 90 ° (positive value at DFIN-OUT)
	CCW rotation	Track A lags track B by 90 ° (negative value at DFIN-OUT)
C0427 = 1	CW rotation	Track A transmits the speed Track B = LOW (positive value at DFIN-OUT)
	CCW rotation	Track A transmits the speed Track B = HIGH (negative value at DFIN-OUT)
C0427 = 2	CW rotation	Track A transmits the speed and direction of rotation (positive value at DFIN-OUT) Track B = LOW
	CCW rotation	Track B transmits the speed and direction of rotation (negative value at DFIN-OUT) Track A = LOW

5.12 Communication modules

Further information ....

on wiring and application of communication modules can be found in the corresponding Mounting Instructions and Communication Manuals.

Possible communication modules

Communication module	Type/order number
Keypad XT	EMZ9371BC
LECOM-A/B (RS232/485)	EMF2102IBV001
LECOM-B (RS485)	EMF2102IBV002
LECOM-LI (optical fibre)	EMF2102IBV003
LON	EMF2141IB
INTERBUS	EMF2113IB
INTERBUS Loop	EMF2112IB
PROFIBUS-DP	EMF2133IB
DeviceNet/CANopen	EMF2175IB

Handling

Plug the communication module onto the AIF interface (X1) or pull it off from the interface. The communication module can also be connected/disconnected during operation.

6 Commissioning

Contents

6.1 Before switching on 6.1-1
6.2 Selection of the correct operating mode 6.2-1
6.3 Parameter setting with the XT EMZ9371BC keypad 6.3-1
6.3.1 Commissioning example in V/f characteristic control mode 6.3-1
6.3.2 Commissioning example in vector control mode 6.3-5
6.4 Controller inhibit 6.4-1
6.5 Changing the assignment of the control terminals X5 and X6 . . . . . 6.5-1
6.5.1 Free configuration of digital input signals 6.5-1
6.5.2 Free configuration of digital outputs 6.5-3
6.5.3 Free configuration of analog input signals 6.5-4
6.5.4 Free configuration of analog outputs 6.5-6
6.6 Adjusting the motor 6.6-1
6.6.1 Entry of motor data 6.6-1
6.6.2 Motor selection list 6.6-4
6.6.3 Motor temperature monitoring with PTC or thermal contact 6.6-8
6.6.4 Motor temperature monitoring with KTY 6.6-10
6.6.5 Current limits 6.6-13
6.6.6 Automatic collection of motor data 6.6-14
6.7 Setting the speed feedback 6.7-1
6.7.1 Incremental encoder with TTL level at X8 . . . . . 6.7-2
6.7.2 Incremental encoder with HTL level at X9 . . . . . 6.7-3
6.8 Operating mode 6.8-1
6.8.1 V/f characteristic control 6.8-4
6.8.2 Vector control 6.8-8
6.9 Switching frequency of the inverter 6.9-1
6.10 Acceleration, deceleration, braking, stopping 6.10-1
6.10.1 Speed range 6.10-1
6.10.2 Setting acceleration times and deceleration times in speed mode 6.10-3
6.10.3 Quick stop 6.10-4
6.10.4 Changing the direction of rotation 6.10-5
6.11 Optimising the operating behaviour 6.11-1
6.11.1 Slip compensation 6.11-1
6.11.2 Oscillation damping 6.11-3
6.11.3 Boost correction with V/f characteristic control 6.11-5
6.11.4 Motor magnetising current with vector control 6.11-9

6.1 Before switching on

Note!

- ► Comply with the corresponding switch-on sequence.
- ► In the event of trouble during the commissioning phase, the ”Troubleshooting and fault elimination” chapter will assist you.

To prevent injury to persons or damage to material assets, check ...

... before connecting the mains voltage:

- ► Wiring for completeness, short circuit, and earth fault
- ► The ”EMERGENCY STOP” function of the entire system
- ► The motor circuit configuration (star/delta) must be adapted to the output voltage of the controller
- ► The in-phase connection of the motor
- ► The direction of rotation or the incremental encoder (if available)

... the most important drive parameter settings before the controller is enabled:

- ► Is the V/f rated frequency adapted to the motor circuit configuration?
- ► Are the drive parameters relevant for your application set correctly?
- ► Is the configuration of the analog and digital inputs and outputs adapted to wiring?

6.2 Selection of the correct operating mode

Description

The control mode of the controller can be selected via the operating mode. You can select between the following modes:

► V/f characteristic control

► Vector control

Selection of the correct operating mode

The V/f characteristic control is the classic operating mode for standard applications.

When using the vector control you will achieve improved drive features compared to the V/f characteristic control due to:

► Higher torque via the complete speed range

► Higher speed accuracy and higher concentricity factor

► Higher efficiency

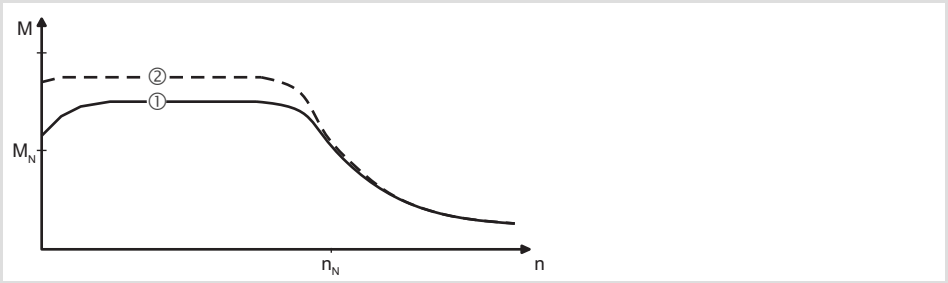

Fig. 6.2-1 Comparison of V/f characteristic control and vector control

① V/f characteristic control

② Vector control

Operating modes recommended for standard applications

The following table helps you to find the correct operating mode for standard applications:

► C0006 = 5: V/f characteristic control with constant U_{min} boost

► C0006 = 1: vector control

Power range 0.37 ... 90 kW	Selection of the operating mode in C0006			
	Motor cable shielded ≤ 50 m unshielded ≤ 100 m		Motor cable shielded > 50 m unshielded > 100 m	
	recommended	alternatively	recommended	alternatively
Single drives				
With constant load	1	5	5	-
With extremely alternating loads	1	5	5	-
With high starting duty	1	5	5	-
Positioning and infeed drives with high dynamics	1	5	5	-
Rewinder with dancer	1	5	-	-
Unwinder with dancer	5	-	-	-
Pump and fan drives [1)]	5	-	5	-
Three-phase AC reluctance motors	5	-	5	-
Three-phase AC sliding rotor motors	5	-	5	-
Three-phase AC motors with fixed voltage/frequency characteristic	5	-	5	-
Group drives (the resulting motor cable length I_{res}) is decisive	$I_{res} = \sqrt{i} \cdot (I_1 + I_2 + ... + I_i)$			
Identical motors and identical loads	1	5	5	-
Different motors and/or alternating loads	5	-	5	-

[1)] For this application we recommend a quadratic voltage characteristic (C0014 = 1)

6.3 Parameter setting with the XT EMZ9371BC keypad

6.3.1 Commissioning example in V/f characteristic control mode

The example describes how to commission a speed control for the controller with power-related three-phase asynchronous motor.

Switch-on sequence			Note
1.	Insert the keypad		
2.	Ensure that the controller is inhibited after switching on the mains	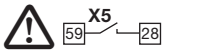	Terminal X5/28 = LOW (see chapter ”Commissioning” →”controller inhibit”)
3.	Ensure that no external error is active		Terminal X5/E4 = HIGH
4.	Switch on		
A	The control card is supplied via an external voltage: Switch on the external DC 24 V supply voltage	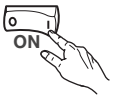	
B	The control card is supplied via the internal voltage: Switch on the mains. The controller provides the DC 24 V supply.		
5.	After approx. 2 s the controller is initialised and the keypad is in the operating level and displays the current speed (C0051)	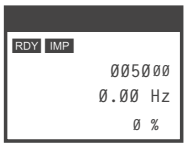	
6.	Change to the ”Terminal I/O” menu and configure the function of the control terminals to adapt them to your application. Lenze setting: C0005 = 1000 (basic configuration ”speed control”)		Use C0002 = 0 to restore the Lenze setting (see chapter ”Commissioning” →”Change assignment of the control terminal X5 and X6”)
7.	For quick commissioning select the menu ”Short setup”		The submenu ”Setup V/f” contains the codes that are required for commissioning a standard application. The digital inputs are configured in the Lenze setting: X5/E1: Deactivate CW rotation/quick stop X5/E2: Deactivate CCW rotation/quick stop X5/E3: Activate fixed setpoint 1 (JOG1) X5/E4: Set error message (TRIP SET) X5/E5: Reset error message (TRIP RESET) (see chapter ”Parameter setting”)
A	Use PRG to change to the menu level		
B	Use ▲ ▲ ▶ ▲ to change to the menu ”Short setup” and then to the submenu ”Setup V/f”		
C	Use ▶ to change to the code level to parameterise your drive		
8.	Adapt the controller to the mains (C0173) Lenze setting: 1 (400 V mains voltage)		
9.	Only for the variants V060, V110, V270, V300 in the power range of 110 ... 400 kW: Adapt the brake transistor threshold (C0174) Lenze setting: 3 (500 V mains voltage, 885 V brake voltage)		See code table
10.	Enter the motor data	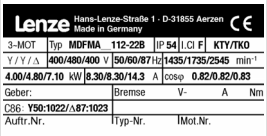	See motor nameplate and chapter ”Commissioning” → ”Adapt motor data”
A	If you use a Lenze motor: Select the motor type connected under C0086.		The data of the Lenze motors are saved under C0086.
B	If you do not use a Lenze motor: Enter the data of the motor nameplate		
	● Rated motor power (C0081) – Lenze setting: device-dependent		

Switch-on sequence			Note
	● Rated motor speed (C0087) – Lenze setting: device-dependent		
	● Rated motor current (C0088) – Lenze setting: device-dependent		Enter value for the selected motor connection method (star/delta)!
	● Rated motor frequency (C0089) – Lenze setting: device-dependent		
	● Rated motor voltage (C0090) – Lenze setting: device-dependent		Enter value for the selected motor connection method (star/delta)!
	● Motor cosφ (C0091) – Lenze setting: device-dependent		
11.	If required, set a base frequency which differs from the rated motor frequency (C0015) Lenze setting: C0015 = C0089	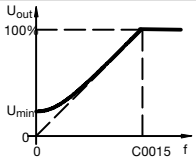	Changes in C0086 and C0089 overwrite the setting in C0015 (see chapter ”Commissioning” →”Operating mode” → ”V/f characteristic control”)
12.	If required, adapt the slip compensation (C0021) Lenze setting: Rated slip in [%] with regard to N_{max} in C0011. The value is calculated from the data of the nameplate and is thus suitable for the majority of applications.		Due to changes in C0086, C0087, C0089 the rated slip is recalculated and automatically entered into C0021 (see chapter ”Commissioning” →”Slip compensation”)
13.	For protecting the motor, set the current limit values ”I_{max} current” (C0022, C0023) Guide value ≤ 2-fold rated motor current		Power range 0.37 ... 90 kW: For dissipating the regenerative energy, use a brake chopper or feedback module, if necessary Power range 110 ... 400 kW: For dissipating regenerative energy, use a brake resistor, if necessary (see chapter ”Commissioning” → ”Motor adjustment” → ”Current limit values”)
A	In motor mode and generator mode (C0022)		
B	Additional limitation in generator mode (C0023) Condition: C0023 < C0022		
14.	Set the operating mode ”V/f” (C0006) Lenze setting: 5 (V/f characteristic control)		(see chapter ”Commissioning” →”Operating mode” → ”V/f characteristic control”)
15.	Set the V/f characteristic (C0014) Lenze setting: 0 (linear characteristic)		
A	Linear characteristic (C0014 = 0)	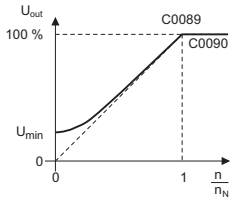	
B	Square-law characteristic (C0014 = 1)	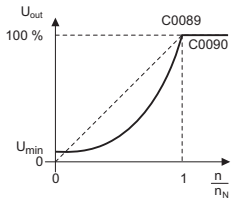	For applications with e. g. pumps or fans
16.	If required, set U_{min} boost (C0016) Lenze setting: 0 %		C0016 = 1 % corresponds to a boost of 1 % of the rated voltage ”Mot voltage” (C0090) (see chapter ”Commissioning” →”Operating mode” → ”V/f characteristic control”)
17.	Set the switching frequency ”fchop” (C0018) Lenze setting: Power range 0.37 ... 90 kW: 6 (8/2 kHz sin) Power range 110 ... 400 kW: 6 (4/2 kHz sin)		See chapter ”Commissioning” → ”Switching frequency of the inverter”

Switch-on sequence			Note
18.	Set your type of the speed feedback system ”Feedback type” (C0025) Lenze setting: 1 (no feedback)		See chapter ”Commissioning” → ”Setting of speed feedback”
A	When using a TTL encoder: Select the encoder used under C0025		
B	When using a TTL encoder with a number of increments which cannot be set under C0025: Set C0025 = 100 Enter the number of increments under C0420		
C	If required, compensate a voltage drop in the incremental encoder cable. Use C0421 to adjust the supply voltage for the TTL encoder.		
D	When using a HTL encoder: Set C0025 = 101 Enter the number of increments under C0420		
19.	Set the maximum speed (C0011) Lenze setting: 3000 rpm	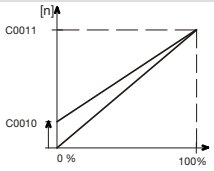	See chapter ”Commissioning” → ”Acceleration, deceleration, braking, stopping”
20.	Set the acceleration time T_{ir} (C0012) Lenze setting: 5.00 s	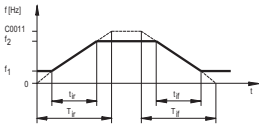	$T_{ir} = t_{ir} \cdot \frac{C0011}{f_2 - f_1}$ (see chapter ”Commissioning” → ”Acceleration, deceleration, braking, stopping”)
21.	Set the deceleration time T_{if} (C0013) Lenze setting: 5.00 s		$T_{if} = t_{if} \cdot \frac{C0011}{f_2 - f_1}$ (see chapter ”Commissioning” → ”Acceleration, deceleration, braking, stopping”)
22.	If required, set the quick stop deceleration ramp (C0105) Lenze setting: 5.00 s		See chapter ”Commissioning” → ”Acceleration, deceleration, braking, stopping”
23.	If required, adapt the fixed setpoints JOG.		See code table
A	JOG 1 (C0039/1) Lenze setting: 1500 rpm		Activation: X5/E3 = HIGH
B	Further fixed setpoints: JOG 2 (C0039/2) ... JOG 15 (C0039/15)		
24.	Ensure a powerfail-proof saving of the settings in one of the four parameter sets (C0003) Use C0003 = 1 to save the settings in parameter set 1.		Code C0003 is the first code in the menu ”Setup V/f”. After switching on the DC 24 V supply or mains connection, parameter set 1 is automatically activated. (see chapter ”Parameter setting”)
25.	Switch on the mains if the external DC 24 V supply voltage is switched on only.		
26.	Enable controller	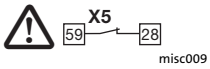	Terminal X5/28 = HIGH (see chapter ”Commissioning” →”controller inhibit”)
27.	Enter the setpoint	Analog setpoint selection: -10 ... +10 V via potentiometer at X6/1 and X6/2	
		Fixed speed: Activate JOG 1 with X5/E3 = HIGH	JOG 1 is parameterised in C0039/1

Switch-on sequence			Note
28.	The drive is running now		CW rotation: X5/E1 = HIGH and X5/E2 = LOW CCW rotation: X5/E1 = LOW and X5/E2 = HIGH If the drive does not start, press RUN in addition (see chapter ”Commissioning” → ”Acceleration, deceleration, braking, stopping”)

Note!

In the ”Diagnostic” menu you can monitor the most important drive parameters

6.3.2 Commissioning example in vector control mode

The example describes how to commission a speed control for the controller with power-related three-phase asynchronous motor.

Switch-on sequence			Note
1.	Insert the keypad		
2.	Ensure that the controller is inhibited after switching on the mains	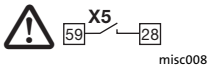	Terminal X5/28 = LOW (see chapter ”Commissioning” →”controller inhibit”)
3.	Ensure that no external error is active		Terminal X5/E4 = HIGH
4.	Switch on		
A	The control card is supplied via an external voltage: Switch on the external DC 24 V supply voltage	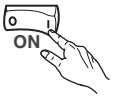	
B	The control card is supplied via the internal voltage: Switch on the mains. The controller provides the DC 24 V supply.		
5.	After approx. 2 s the controller is initialised and the keypad is in the operating level and displays the current speed (C0051)	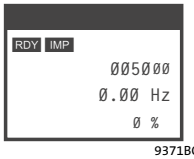	
6.	Change to the ”Terminal I/O” menu and configure the function of the control terminals to adapt them to your application. Lenze setting: C0005 = 1000 (basic configuration ”speed control”)		Use C0002 = 0 to restore the Lenze setting (see chapter ”Commissioning” →”Change assignment of the control terminal X5 and X6”)
7.	For quick commissioning select the menu ”Short setup”		The submenu ”Setup vector” contains the codes that are required for commissioning a standard application. The digital inputs are configured in the Lenze setting: X5/E1: Deactivate CW rotation/quick stop X5/E2: Deactivate CCW rotation/quick stop X5/E3: Activate fixed setpoint 1 (JOG1) X5/E4: Set error message (TRIP SET) X5/E5: Reset error message (TRIP RESET) (see chapter ”Parameter setting”)
A	Use PRG to change to the menu level		
B	Use ▲ ▲ ▶ ▲ to change to the menu ”Short setup” and then to the submenu ”Setup vector”		
C	Use ▶ to change to the code level to parameterise your drive		
8.	Adapt the controller to the mains (C0173) Lenze setting: 1 (400 V mains voltage)		
9.	Only for the variants V060, V110, V270, V300 in the power range of 110 ... 400 kW: Adapt the brake transistor threshold (C0174) Lenze setting: 3 (500 V mains voltage, 885 V brake voltage)		See code table
10.	Enter the motor data	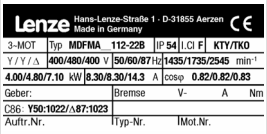	See motor nameplate and chapter ”Commissioning” → ”Adapt motor data”
A	If you use a Lenze motor: Select the motor type connected under C0086.		The data of the Lenze motors are saved under C0086.
B	If you do not use a Lenze motor: Enter the data of the motor nameplate		
	● Rated motor power (C0081) – Lenze setting: device-dependent		
	● Rated motor speed (C0087) – Lenze setting: device-dependent		

Switch-on sequence			Note
	● Rated motor current (C0088) – Lenze setting: device-dependent		Enter value for the selected motor connection method (star/delta)!
	● Rated motor frequency (C0089) – Lenze setting: device-dependent		
	● Rated motor voltage (C0090) – Lenze setting: device-dependent		Enter value for the selected motor connection method (star/delta)!
	● Motor cosφ (C0091) – Lenze setting: device-dependent		
11.	For protecting the motor, set the current limit values ”I_{max} current” (C0022, C0023) Guide value ≤ 2-fold rated motor current		Power range 0.37 ... 90 kW: For dissipating the regenerative energy, use a brake chopper or feedback module, if necessary Power range 110 ... 400 kW: For dissipating regenerative energy, use a brake resistor, if necessary (see chapter ”Commissioning” → ”Motor adjustment” → ”Current limit values”)
A	In motor mode and generator mode (C0022)		
B	Additional limitation in generator mode (C0023) Condition: C0023 < C0022		
12.	If the motor temperature is monitored with a thermal sensor KTY: Activate the temperature feedback with C0594 (fault SD6) Lenze setting: 3 (switched off)		A temperature feedback with KTY has a positive effect on the vector control, since the motor data identification considers the temperature influence in the motor model. (see chapter ”Commissioning” → ”Motor adjustment”)
13.	Start the motor data identification ”ident run” (C0148)		(see chapter ”Commissioning” →”Adjusting the motor”)
A	Ensure that the controller inhibit is active	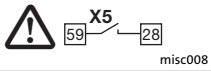	Terminal X5/28 = LOW
B	Switch on the mains		
C	Set C0148 = 1		
D	Enable controller	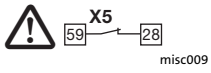	Terminal X5/28 = HIGH The identification starts: ● The segment IMP goes off ● ”WRK run” is displayed ● The motor is energised and ”whistles” ● The motor does not rotate
E	If after approx. 1 ... 2 min the segment IMP is active again, inhibit the controller	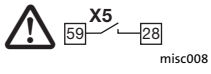	Terminal X5/28 = LOW The identification is completed. The following values have been detected and entered into the codes: ● Inverter error characteristic (C1753/xx) ● Rotor resistance ”Mot Rr” (C0082) ● Stator resistance ”Mot Rs” (C0084) ● Leakage inductance ”Mot Lss” (C0085) ● Stator inductance ”Mot Ls” (C0092)
14.	Set the operating mode ”vector ctrl” (C0006) Lenze setting: 5 (V/f characteristic control)		(see chapter ”Commissioning” → ”Operating mode” → ”Vector control”)
15.	Set the switching frequency ”fchop” (C0018) Lenze setting: Power range 0.37 ... 90 kW: 6 (8/2 kHz sin) Power range 110 ... 400 kW: 6 (4/2 kHz sin)		See chapter ”Commissioning” → ”Switching frequency of the inverter”
16.	Set your type of the speed feedback system ”Feedback type” (C0025) Lenze setting: 1 (no feedback)		See chapter ”Commissioning” → ”Setting of speed feedback”
A	When using a TTL encoder: Select the encoder used under C0025		

Switch-on sequence			Note
B	When using a TTL encoder with a number of increments which cannot be set under C0025: Set C0025 = 100 Enter the number of increments under C0420		
C	If required, compensate a voltage drop in the incremental encoder cable. Use C0421 to adjust the supply voltage for the TTL encoder.		
D	When using a HTL encoder: Set C0025 = 101 Enter the number of increments under C0420		
17.	Set the maximum speed (C0011) Lenze setting: 3000 rpm	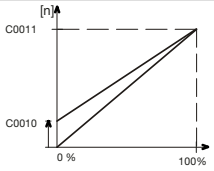	See chapter ”Commissioning” → ”Acceleration, deceleration, braking, stopping”
18.	Set the acceleration time T_{ir} (C0012) Lenze setting: 5.00 s	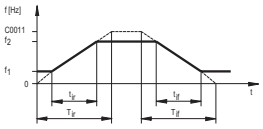	$T_{ir} = t_{ir} \cdot \frac{C0011}{f_2 - f_1}$ (see chapter ”Commissioning” → ”Acceleration, deceleration, braking, stopping”)
19.	Set the deceleration time T_{if} (C0013) Lenze setting: 5.00 s		$T_{if} = t_{if} \cdot \frac{C0011}{f_2 - f_1}$ (see chapter ”Commissioning” → ”Acceleration, deceleration, braking, stopping”)
20.	If required, set the quick stop deceleration ramp (C0105) Lenze setting: 5.00 s		See chapter ”Commissioning” → ”Acceleration, deceleration, braking, stopping”
21.	If required, adapt the fixed setpoints JOG.		See code table
A	JOG 1 (C0039/1) Lenze setting: 1500 rpm		Activation: X5/E3 = HIGH
B	Further fixed setpoints: JOG 2 (C0039/2) ... JOG 15 (C0039/15)		
22.	Ensure a powerfail-proof saving of the settings in one of the four parameter sets (C0003) Use C0003 = 1 to save the settings in parameter set 1.		Code C0003 is the first code in the menu ”Setup V/f”. After switching on the DC 24 V supply or mains connection, parameter set 1 is automatically activated. (see chapter ”Parameter setting”)
23.	Switch on the mains if the external DC 24 V supply voltage is switched on only.		
24.	Enable controller	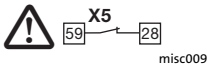	Terminal X5/28 = HIGH (see chapter ”Commissioning” →”controller inhibit”)
25.	Enter the setpoint	Analog setpoint selection: -10 ... +10 V via potentiometer at X6/1 and X6/2	
		Fixed speed: Activate JOG 1 with X5/E3 = HIGH	JOG 1 is parameterised in C0039/1

Switch-on sequence			Note
26.	The drive is running now		CW rotation: X5/E1 = HIGH and X5/E2 = LOW CCW rotation: X5/E1 = LOW and X5/E2 = HIGH If the drive does not start, press RUN in addition (see chapter ”Commissioning” → ”Acceleration, deceleration, braking, stopping”)

Note!

In the ”Diagnostic” menu you can monitor the most important drive parameters

6.4 Controller inhibit

Description

If the controller inhibit is active, the power outputs are inhibited.

► The drive coasts in zero-torque mode.

► Status display of keypad: Pulse inhibit IMP

► Status display at the controller: The green LED is blinking.

Danger!

Do not use the ”controller inhibit” function (DCTRL1-CINH) for emergency-off. The controller inhibit only inhibits the power outputs and does **not** disconnect the controller from the mains!

The drive could start again any time.

Codes for parameter setting

Code		Possible settings			IMPORTANT	
No.	Name	Lenze	Selection			
C0040	Ctrl enable	0			Controller enable ● Controller can only be enabled if X5/28 = HIGH	📖 6.4-1
			0	Ctrl inhibit	Controller inhibited	
			1	Ctrl enable	Controller enabled	

Activation

Via terminal X5/28:

► A LOW level at the terminal inhibits the controller (cannot be inverted)

► A HIGH level re-enables the controller

Via the keys of the keypad (if C0469 = 1):

► STOP inhibits the controller

► RUN re-enables the controller

Via code C0040:

► C0040 = 0 inhibits the controller

► C0040 = 1 re-enables the controller

Note!

► The sources for controller inhibit are ANDed, i.e. the drive only restarts if the controller inhibit signals of all signal sources have been eliminated.

► The restart starts with zero speed. If centrifugal masses are still rotating, this can lead to an overcurrent.

6.5 Changing the assignment of the control terminals X5 and X6

Danger!

If you select a configuration in C0005, the signal assignment of the inputs and outputs will be overwritten with the corresponding basic assignment!

► Adapt the signal assignment to your wiring!

6.5.1 Free configuration of digital input signals

Description

► Internal digital signals can be freely linked with external digital signal sources. This serves to establish a freely configurable control of the drive controller.

– Digital inputs X5/E1 ... X5/E5

► A signal source can be linked with several targets. Ensure reasonable linkages for not activating functions that are mutually exclusive (e. g. linking a digital input with quick stop and DC injection braking at the same time).

Codes for parameter setting

Code		Possible settings				IMPORTANT	
No.	Name	Lenze	Selection				
C0114			0	High active	HIGH level is active	Inversion of digital input signals at X5, function block DIGIN	📖 6.5-1 See System Manual (extension)
			1	LOW active	LOW level is active		
1	DIGIN1 pol	0				Terminal X5/E1	
2	DIGIN2 pol	0				Terminal X5/E2	
3	DIGIN3 pol	0				Terminal X5/E3	
4	DIGIN4 pol	1				Terminal X5/E4	
5	DIGIN5 pol	0				Terminal X5/E5	
5	DIGIN6 (ST) pol	0				Terminal X5/ST	

Linking signals

The internal digital signal can be linked with an external signal source by entering the selection figure of the external signal into the configuration code of the internal digital signal.

Example

► C0787/2 =53 ⇨ signal source for JOG2 is terminal X5/E3

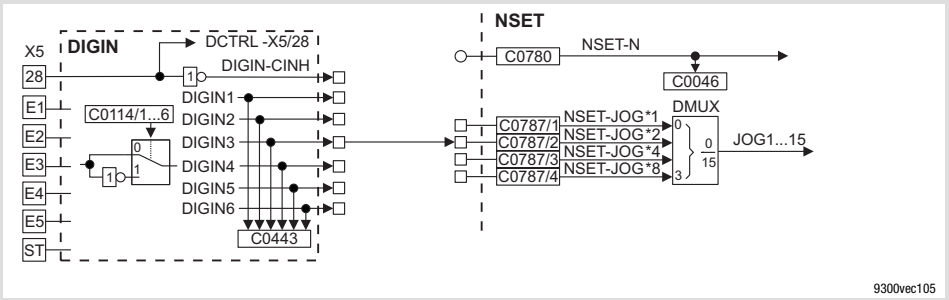

Fig. 6.5-1 Connecting digital signal JOG2 with terminal X5/E3

Tip!

► A list with all selection figures is included in the chapter ”Configuration” → ”Selection lists”.

► For signal linkage we recommend the function block editor in GDC (ESP-GDC2).

Signal level

► Terminals (X5/E1 ... X5/E5):
– HIGH = +12 V ... +30 V
– LOW = 0 V ... +3 V

► Response times: 1 ms

Inverting the signal level

In C0114 you can define the active signal level (HIGH level active or LOW level active) for the terminals X5/E1 ... X5/E5.

Example

► C0114/3 =1 ⇨ LOW level at X5/E3 activates JOG2

6.5.2 Free configuration of digital outputs

Description

► The digital outputs X5/A1 ... X5/A4 can be freely linked with internal digital signals.

► One signal source can be linked with several targets.

Codes for parameter setting

Code		Possible settings				IMPORTANT	
No.	Name	Lenze	Selection				
C0117 STOP					📖 Selection list 2	Configuration of digital inputs signals, function block DIGOUT **A change of the basic configuration in C0005 changes the signal assignment!**	📖 6.5-3 See System Manual (extension)
1	CFG: DIGOUT1	15000	DCTRL-TRIP			Terminal X5/A1	
2	CFG: DIGOUT2	10650	CMP1-OUT			Terminal X5/A2	
3	CFG: DIGOUT3	500	DCTRL-RDY			Terminal X5/A3	
4	CFG: DIGOUT4	5003	MCTRL-MMAX			Terminal X5/A4	
C0118			0	High active	HIGH level is active	Inversion of digital output signals, function block DIGOUT	
			1	LOW active	LOW level is active		
1	DIGOUT1 pol	1				Terminal X5/A1	
2	DIGOUT2 pol	1				Terminal X5/A2	
3	DIGOUT3 pol	0				Terminal X5/A3	
4	DIGOUT4 pol	0				Terminal X5/A4	

Linking signals

The digital outputs can be linked with internal digital signals by entering the selection figure of the internal signal into corresponding subcode of C0117.

Example

► C0117/2 = 505 ⇨ signal source for X5/A2 is the status message ”direction of rotation” (DCTRL-CW/CCW)

Signal level

► Terminals (X5/A1 ... X5/A4):
– HIGH = +12 V ... +30 V
– LOW = 0 V ... +3 V

► Response times: 1 ms

Inverting the signal level

In C0118 you can define the active signal level (HIGH level active or LOW level active) for the terminals X5/A1 ... X5/A4.

Example

► C0118/2 =1 ⇨ With LOW level at X5/A2 the motor rotates in CW direction (with in-phase motor connection)

6.5.3 Free configuration of analog input signals

Description

► Internal analog signals can be freely linked with external analog signal sources:
– Analog inputs X3/1, X3/2 and X3/3, X3/4

► One signal source can be linked with several targets.

Codes for parameter setting

Code		Possible settings				IMPORTANT	
No.	Name	Lenze	Selection				
C0026			-199.99	{0.01 %}	199.99	Free control code FCODE 26/1 and FCODE26/2	📖 6.5-4 See System Manual (extension)
1	FCODE (offset)	0.00				Offset of AIN1 (X6/1, X6/2)	
2	FCODE (offset)	0.00				Offset of AIN2 (X6/3, X6/4)	
C0027			-199.99	{0.01 %}	199.99	Free control code FCODE 27/1 and FCODE27/2	
1	FCODE (gain)	100.00				Gain AIN1 (X6/1, X6/2) ● 100 % = gain 1	
2	FCODE (gain)	100.00				Gain AIN2 (X6/3, X6/4) ● 100 % = gain 1	
C0034	Mst current	0	0	-10 V ... +10 V		Voltage / current range for analog signals at input X6/1, X6/2 ● Observe jumper position of X3	📖 5.8-8 📖 6.5-4
			1	4 mA ... 20 mA			
			2	-20 mA ... +20 mA			

Linking signals

The internal analog signals can be linked with an external signal source by entering the selection figure of the external signal into the configuration code of the internal analog signal.

Example

► C0780 = 50 ⇨ signal source for the main setpoint (NSET-N) is terminal X6/1, X6/2

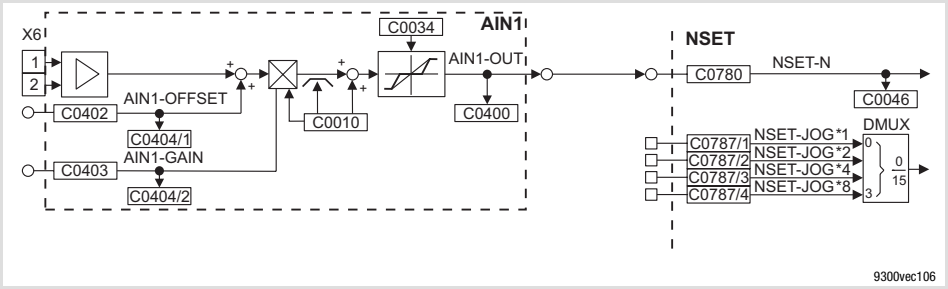

Fig. 6.5-2 Linking analog signal NSET-N with terminal X6/1, X6/2

Tip!

► A list with all selection figures is included in the chapter ”Configuration” → ”Selection lists”.

► For signal linkage we recommend the function block editor in GDC (ESP-GDC2).

Adjustment

Gain and offset

Set gain (C0027) and offset (C0026) to adapt the input signal to the application.

Input range of X6/1, X6/2

Input range	C0034	Position of jumper at X3
-10 V ... +10 V	C0034 = 0	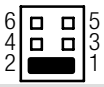
+4 mA ... +20 mA	C0034 = 1	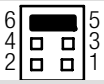
-20 mA ... +20 mA	C0034 = 2	

Note!

Different settings in C0034 and of X3 result in a wrong input signal.

6.5.4 Free configuration of analog outputs

Description

► The analog outputs (X6/62, X6/63) can be freely linked with internal analog process or monitoring signals. The controller outputs a voltage proportional to the internal signal at the analog outputs.

► One signal source can be linked with several targets.

Codes for parameter setting

Code		Possible settings				IMPORTANT	
No.	Name	Lenze	Selection				
C0108			-199.99	{0.01 %}	199.99	Free control code FCODE108/1 and FCODE108/2	📖 6.5-6 See System Manual (extension)
1	FCODE (gain)	100.00				Gain of analog output signal AOUT1 (X6/62) ● 100 % = gain 1	
2	FCODE (gain)	100.00				Gain of analog output signal AOUT2 (X6/63) ● 100 % = gain 1	
C0109			-199.99	{0.01 %}	199.99	Free control code FCODE109/1 and FCODE109/2	
1	FCODE (offset)	0.00				Offset of analog output signal AOUT1 (X6/62)	
2	FCODE (offset)	0.00				Offset of analog output signal AOUT2 (X6/63)	

Linking signals

Analog outputs can be linked with internal analog signals by entering the selection figure of the internal signal into the code of C0431 (AOUT1, X6/62) or C0436 (AOUT2, X6/63).

Example

► C0436 = 5006 ⇨ signal source for X6/63 is the actual motor voltage

Tip!

► A list with all selection figures is included in the chapter ”Configuration” → ”Selection lists”.

► For signal linkage we recommend the function block editor in GDC (ESP-GDC2).

Adjustment

Set gain (C0108) and offset (C0109) to adapt the output signal to the application.

With an internal signal of 100 % and a gain of 1, a voltage of 10 V is output at the terminal.

6.6 Adjusting the motor

6.6.1 Entry of motor data

Description

The vector control mode requires considerably more motor data than the V/f characteristic control mode.

Basically all motor data should be entered independent of the operating mode. This enables the controller to detect further data as e.g. slip compensation (C0021), maximum torque (C0057), number of motor pole pairs (C0059) always conclusively and enter them into the corresponding codes.

Codes for parameter setting

Code		Possible settings				IMPORTANT	
No.	Name	Lenze	Selection				
C0081 STOP	Mot power	→	0.01	{0.01 kW}	500.00	Rated motor power → Change of C0086 resets value to factory setting ● Change of C0081 sets C0086 = 0	
C0086 STOP	Mot type	→	📖 Motor selection list			Motor type selection → depending on the controller used ● Motor selection in C0086 sets the corresponding parameters in C0021, C0022, C0081, C0087, C0088, C0089, C0090, C0091	📖 6.6-1
C0087 STOP	Mot speed	→	50	{1 rpm}	36000	Rated motor speed → depending on C0086 ● Motor selection in C0086 set the corresponding rated motor speed in C0087 ● Change of C0087 sets C0086 = 0	📖 6.6-1
C0088 STOP	MOT CURRENT	→	0.5	{0.1 A}	500.0	Rated motor current → Depending on C0086 ● Selection of a motor in C0086 sets the corresponding rated motor current in C0088 ● Change of C0088 sets C0086 = 0	📖 6.6-1
C0089 STOP	Mot frequency	→	10	{1 Hz}	5000	Rated motor frequency → depending on C0086 ● Motor selection in C0086 sets the corresponding rated motor frequency in C0089 ● Change of C0089 sets C0086 = 0	📖 6.6-1

Code		Possible settings				IMPORTANT	
No.	Name	Lenze	Selection				
C0090 STOP	Mot voltage	→	0	{1 V}	1000	Rated motor voltage → depending on C0086 ● Motor selection in C0086 sets the corresponding rated motor voltage in C0090 ● Change of C0090 sets C0086 = 0	📖 6.6-1
C0091 STOP	Mot cos phi	→	0.50	{0.01 }	1.00	Motor cos φ → depending on C0086 ● Motor selection in C0086 sets the corresponding motor cos φ in C0091 ● Change of C0091 sets C0086 = 0	📖 6.6-1

Sequence of the motor data entry

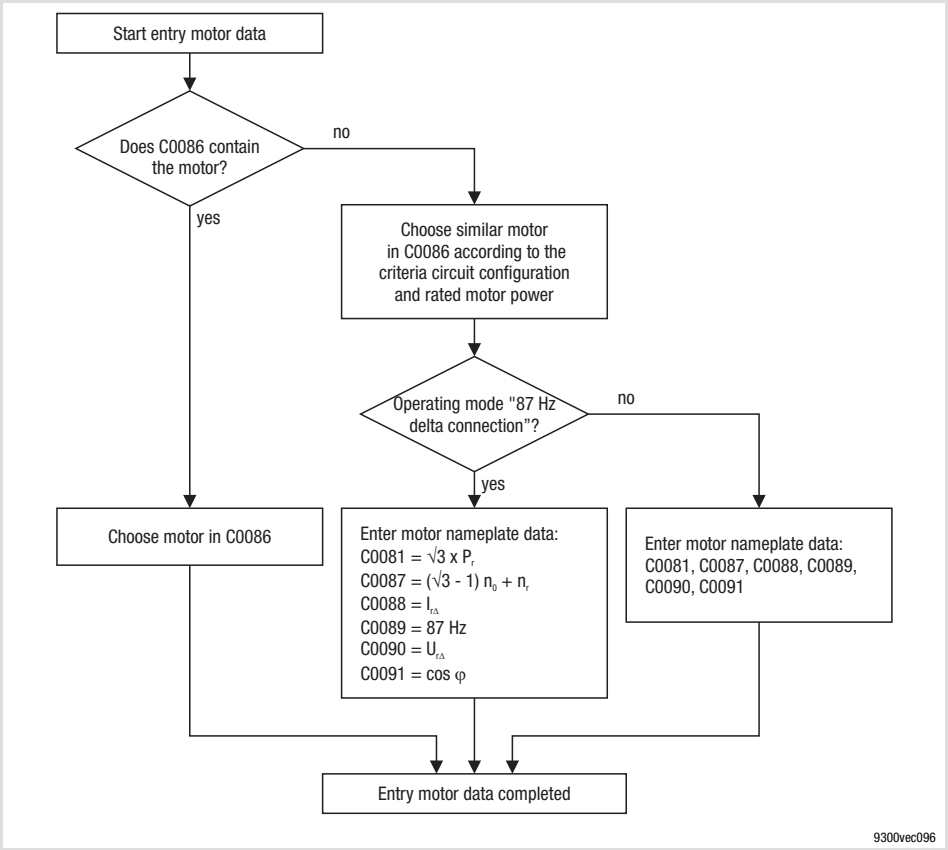

Fig. 6.6-1 Sequence diagram for motor data entry

P_N Rated motor power
n_0 Synchronous speed
n_N Rated motor speed
$I_{N\Delta}$ Rated motor current for delta connection
$U_{N\Delta}$ Rated motor voltage for delta connection

Lenze motor which is included in C0086

By selecting the motor in C0086 all required motor data are automatically entered into the following codes.

Code	Description	Code	Description
C0022	Limit current for operation in motor mode	C0087	Rated motor speed
C0023	Limit current for operation in generator mode	C0088	Rated motor current
C0081	Rated motor power	C0089	Rated motor frequency
C0082	Motor rotor resistance	C0090	Rated motor voltage
C0084	Motor stator resistance	C0091	Power factor cos φ
C0085	Motor leakage inductance	C0092	Motor stator inductance

Motor of another manufacturer or a Lenze motor which is not included in C0086

1. Select a similar motor in C0086.
   – Selection criteria: Connection method, rated motor power, rated motor frequency
2. Enter the motor data of the motor nameplate or data sheet into C0081, C0087, C0088, C0089, C0090 and C0091.

Operating mode "87 Hz delta connection"

By changing from star to delta connection and changing the base frequency (f_{base} = 87 Hz), the induction machine (f_N = 50 Hz) develops √three times the power with a frequency of 87 Hz. In the total range the machine runs with a √3 times higher delta current, which must be provided by the controller.

Example

A motor with the following data is to be connected in delta connection:

► DSM 50 Hz; Δ/Y 230/400 V; 18.5 kW; 62/35 A, 1450 min^{-1}, cos φ = 0.88

Sequence		Note
1.	Enter C0086 = 263 (DXRAXX 180-12-87; 32.4 kW; 87 Hz)	Select a motor in C0086, which has a √3 times higher rated motor power with delta connection.
2.	Enter C0087 = 2548 min^{-1}	Consider the slip speed. With a rated motor torque the slip speed of an asynchronous motor is nearly constant over the total speed range. Calculation of the rated motor speed: $C0087 = (\sqrt{3} - 1) \cdot n_0 + n_N$ $C0087 = (\sqrt{3} - 1) \cdot 1500\,min^{-1} + 1450\,min^{-1}$ n_0 = synchronous speed n_N = rated motor speed at 50 Hz
3.	Enter C0088 = 62 A	Rated motor current for delta connection
4.	Enter C0090 = 400 V	Rated motor voltage for star connection
5.	Enter C0089 = 87 Hz	Rated motor frequency
6.	Enter C0091 = 0.88	Power factor cos φ

6.6.2 Motor selection list

Three-phase asynchronous motors

The following table contains all asynchronous motors, which can be selected via C0086.

The "reference list of asynchronous motors" contains the asynchronous motors, the data of which must be entered manually. (📖 6.6-6)

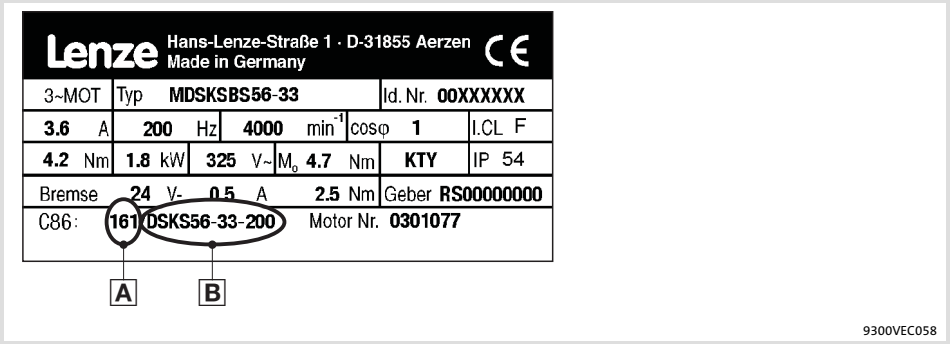

Fig. 6.6-2 Nameplate of a Lenze motor

A	B	Lenze type	C0081 P_N [kW]	C0087 n_N [rpm]	C0088 I_r [A]	C0089 f_N [Hz]	C0090 U_N [V]	Motor type	Temperature sensor
9	DSGA56-22-100	SDSGA056-22-100	0.24	2790	0.8	100	390	Asynchronous inverter - motor (Star connection)	KTY
10	MDSKA56-140	MDSKAXX056-22	0.80	3950	2.4	140	390	Asynchronous servo motor	KTY
11	MDFKA71-120	MDFKAXX071-22	2.20	3410	6.0	120			
12	MDSKA71-140	MDSKAXX071-22	1.70	4050	4.4	140			
13	MDFKA80-60	MDFKAXX080-22	2.10	1635	4.8	60			
14	MDSKA80-70	MDSKAXX080-22	1.40	2000	3.3	70			
15	MDFKA80-120	MDFKAXX080-22	3.90	3455	9.1	120			
16	MDSKA80-140	MDSKAXX080-22	2.30	4100	5.8	140			
17	MDFKA90-60	MDFKAXX090-22	3.80	1680	8.5	60			
18	MDSKA90-80	MDSKAXX090-22	2.60	2300	5.5	80			
19	MDFKA90-120	MDFKAXX090-22	6.90	3480	15.8	120			
20	MDSKA90-140	MDSKAXX090-22	4.10	4110	10.2	140	350		
21	MDFKA100-60	MDFKAXX100-22	6.40	1700	13.9	60	390		
22	MDSKA100-80	MDSKAXX100-22	4.00	2340	8.2	80			
23	MDFKA100-120	MDFKAXX100-22	13.20	3510	28.7	120			
24	MDSKA100-140	MDSKAXX100-22	5.20	4150	14.0	140	330		
25	MDFKA112-60	MDFKAXX112-22	11.00	1710	22.5	60	390		
26	MDSKA112-85	MDSKAXX112-22	6.40	2490	13.5	85			
27	MDFKA112-120	MDFKAXX112-22	20.30	3520	42.5	120			
28	MDSKA112-140	MDSKAXX112-22	7.40	4160	19.8	140	320		
30	DFQA100-50	MDFQAXX100-22	10.60	1420	26.5	50	360		
31	DFQA100-100	MDFQAXX100-22	20.30	2930	46.9	100			
32	DFQA112-28	MDFQAXX112-22	11.50	760	27.2	28			
33	DFQA112-58	MDFQAXX112-22	22.70	1670	49.1	58			
34	DFQA132-20	MDFQAXX132-32	17.00	555	45.2	20			
35	DFQA132-42	MDFQAXX132-32	35.40	1200	88.8	42			
40	DFQA112-50	MDFQAXX112-22	20.10	1425	43.7	50			
41	DFQA112-100	MDFQAXX112-22	38.40	2935	81.9	100			
42	DFQA132-36	MDFQAXX132-32	31.10	1035	77.4	36			
43	DFQA132-76	MDFQAXX132-32	60.10	2235	144.8	76	340		

A	B	Lenze type	C0081 P_N [kW]	C0087 n_N [rpm]	C0088 I_r [A]	C0089 f_N [Hz]	C0090 U_N [V]	Motor type	Temperature sensor
210	DXRAXX071-12-50	DXRAXX071-12	0.25	1410	0.9	50	400	Asynchronous inverter - motor (Star connection)	Thermal contact
211	DXRAXX071-22-50	DXRAXX071-22	0.37	1398	1.2				
212	DXRAXX080-12-50	DXRAXX080-12	0.55	1400	1.7				
213	DXRAXX080-22-50	DXRAXX080-22	0.75	1410	2.3				
214	DXRAXX090-12-50	DXRAXX090-12	1.10	1420	2.7				
215	DXRAXX090-32-50	DXRAXX090-32	1.50	1415	3.6				
216	DXRAXX100-22-50	DXRAXX100-22	2.20	1425	4.8				
217	DXRAXX100-32-50	DXRAXX100-32	3.00	1415	6.6				
218	DXRAXX112-12-50	DXRAXX112-12	4.00	1435	8.3				
219	DXRAXX132-12-50	DXRAXX132-12	5.50	1450	11.0				
220	DXRAXX132-22-50	DXRAXX132-22	7.50	1450	14.6				
221	DXRAXX160-12-50	DXRAXX160-12	11.00	1460	21.0				
222	DXRAXX160-22-50	DXRAXX160-22	15.00	1460	27.8				
223	DXRAXX180-12-50	DXRAXX180-12	18.50	1470	32.8				
224	DXRAXX180-22-50	DXRAXX180-22	22.00	1456	38.8				
225	30kW-ASM-50	–	30.00	1470	52.0	50	400	Asynchronous inverter - motor (Star connection)	–
226	37kW-ASM-50	–	37.00	1470	66.0				
227	45kW-ASM-50	–	45.00	1480	82.0				
228	55kW-ASM-50	–	55.00	1480	93.0				
229	75kW-ASM-50	–	75.00	1480	132.0				
230	75kW-ASM-50	–	90.00	1480	132.0				
250	DXRAXX071-12-87	DXRAXX071-12	0.43	2525	1.5	87	400	Asynchronous inverter - motor (Delta connection)	Thermal contact
251	DXRAXX071-22-87	DXRAXX071-22	0.64	2515	2.0				
252	DXRAXX080-12-87	DXRAXX080-12	0.95	2515	2.9				
253	DXRAXX080-22-87	DXRAXX080-22	1.3	2525	4.0				
254	DXRAXX090-12-87	DXRAXX090-12	2.0	2535	4.7				
255	DXRAXX090-32-87	DXRAXX090-32	2.7	2530	6.2				
256	DXRAXX100-22-87	DXRAXX100-22	3.9	2535	8.3				
257	DXRAXX100-32-87	DXRAXX100-32	5.35	2530	11.4				
258	DXRAXX112-12-87	DXRAXX112-12	7.10	2545	14.3				
259	DXRAXX132-12-87	DXRAXX132-12	9.7	2555	19.1				
260	DXRAXX132-22-87	DXRAXX132-22	13.2	2555	25.4				
261	DXRAXX160-12-87	DXRAXX160-12	19.3	2565	36.5				
262	DXRAXX160-22-87	DXRAXX160-22	26.4	2565	48.4				
263	DXRAXX180-12-87	DXRAXX180-12	32.4	2575	57.8				
264	DXRAXX180-22-87	DXRAXX180-22	38.7	2560	67.4				
265	30kW-ASM-87	–	52.00	2546	90.0	87	400	Asynchronous inverter - motor (Delta connection)	–
266	37kW-ASM-87	–	64.00	2546	114.0				
267	45kW-ASM-87	–	78.00	2563	142.0				
268	55kW-ASM-87	–	95.00	2563	161.0				
269	75kW-ASM-87	–	130.00	2563	228.0				
270	90kW-ASM-87	–	156.00	2590	277.0				
410	MDXMAXM-071-12-50	MDXMAXM-071-12	0.25	1400	0.82	50	400	Asynchronous inverter - motor (Star connection)	Thermal contact
411	MDXMAXM-071-32-50	MDXMAXM-071-32	0.37	1400	1.20	50	400		
412	MDXMAXM-080-12-50	MDXMAXM-080-12	0.55	1400	1.60	50	400		
413	MDXMAXM-080-32-50	MDXMAXM-080-32	0.75	1380	2.00	50	400		
414	MDXMAXM-090-12-50	MDXMAXM-090-12	1.10	1410	2.60	50	400		
415	MDXMAXM-090-32-50	MDXMAXM-090-32	1.50	1420	3.50	50	400		
416	MDXMAXM-100-12-50	MDXMAXM-100-12	2.20	1400	5.60	50	400		
417	MDXMAXM-100-32-50	MDXMAXM-100-32	3.00	1400	7.30	50	400		
418	MDXMAXM-112-22-50	MDXMAXM-112-22	4.00	1430	8.50	50	400		

A	B	Lenze type	C0081 P_N [kW]	C0087 n_N [rpm]	C0088 I_r [A]	C0089 f_N [Hz]	C0090 U_N [V]	Motor type	Temperature sensor
440	MDXMAXM-071-12-87	MDXMAXM-071-12	0.43	2510	1.40	87	400	Asynchronous inverter - motor (Delta connection)	Thermal contact
441	MDXMAXM-071-32-87	MDXMAXM-071-32	0.64	2510	2.10	87	400		
442	MDXMAXM-080-12-87	MDXMAXM-080-12	0.95	2510	2.80	87	400		
443	MDXMAXM-080-32-87	MDXMAXM-080-32	1.30	2490	3.50	87	400		
444	MDXMAXM-090-12-87	MDXMAXM-090-12	2.00	2520	4.50	87	400		
445	MDXMAXM-090-32-87	MDXMAXM-090-32	2.70	2530	6.10	87	400		
446	MDXMAXM-100-12-87	MDXMAXM-100-12	3.90	2510	9.70	87	400		
447	MDXMAXM-100-32-87	MDXMAXM-100-32	5.40	2510	12.70	87	400		
448	MDXMAXM-112-22-87	MDXMAXM-112-22	7.10	2540	14.80	87	400		
449	MDXMAXM-112-32-50	MDXMAXM-112-32	5.50	1440	12.50	50	400		
450	MDXMAXM-132-22-50	MDXMAXM-132-22	7.50	1460	16.80	50	400		
451	MDXMAXM-132-32-50	MDXMAXM-132-32	9.20	1450	19.50	50	400		

Reference list of asynchronous motors

The motors listed under ”motor nameplate” are not available in Global Drive Control (GDC) and the device software.

1. Enter the corresponding value listed under C0086 into the code C0086.
2. Compare the codes for the motor data with the values in the table.
   – If necessary, adapt the values in the controller to the values in the table.
3. If necessary, optimise the dynamic behaviour of your machine via the codes C0070 and C0071.

Information on the motor nameplate		Motor data													
Field		C0086	C0022	C0081	C0084	C0085	C0087	C0088	C0089	C0090	C0091	C0070	C0071	C0075	C0076
C86	Type		Imax [A]	P_r [kW]	R_s [Ω]	Lσ [mH]	n_N [rpm]	IN [A]	f_r [Hz]	U_r [V]	cos φ	V_{pn}	T_{nn}	V_{pi}	T_{ni}
1006	MDXMAxx-071-12	210	1.28	0.25	39.90	157.20	1355	0.85	50	400	0.70	6	300	3.6	2
1007	MDXMAxx-071-12	250	2.25	0.47	39.90	157.20	2475	1.50	87	400	0.66	6	300	2	2
1008	MDXMAxx-071-32	211	1.73	0.37	25.03	122.60	1345	1.15	50	400	0.74	6	300	3.4	2
1009	MDXMAxx-071-32	251	3.00	0.67	25.03	122.60	2470	2.00	87	400	0.70	6	300	2.5	2
1010	MDXMAxx-080-12	212	2.40	0.55	20.69	89.00	1370	1.60	50	400	0.78	6	300	3.2	2
1011	MDXMAxx-080-12	252	3.90	1.00	20.69	89.00	2480	2.60	87	400	0.73	6	300	1.6	2
1012	MDXMAxx-080-32	213	2.85	0.75	11.69	65.20	1390	1.90	50	400	0.80	6	300	3.5	2
1013	MDXMAxx-080-32	253	4.95	1.35	11.69	65.20	2510	3.30	87	400	0.77	6	300	1.9	3
1014	MDXMAxx-090-12	214	3.90	1.10	10.01	40.20	1405	2.60	50	400	0.80	6	300	2.5	2
1015	MDXMAxx-090-12	254	6.75	2.00	10.01	40.20	2520	4.50	87	400	0.77	6	300	2	2
1016	MDXMAxx-090-32	215	5.25	1.50	5.85	28.80	1410	3.50	50	400	0.78	6	300	2	2
1017	MDXMAxx-090-32	255	9.15	2.70	5.85	28.80	2525	6.10	87	400	0.76	6	300	1	2
1018	MDXMAxx-100-12	216	7.20	2.20	2.90	20.00	1425	4.80	50	400	0.80	6	300	1	1.5
1019	MDXMAxx-100-12	256	12.45	3.90	2.90	20.00	2535	8.30	87	400	0.76	6	300	0.8	1.5
1020	MDXMAxx-100-32	217	9.75	3.00	2.10	17.00	1415	6.50	50	400	0.81	6	300	2.5	1.5
1021	MDXMAxx-100-32	257	17.10	5.40	2.10	17.00	2530	11.40	87	400	0.78	6	300	1.4	1.8
1022	MDXMAxx-112-22	218	12.45	4.00	1.50	11.00	1435	8.30	50	400	0.82	6	300	2	2
1023	MDXMAxx-112-22	258	21.45	7.10	1.50	11.00	2545	14.30	87	400	0.83	6	300	1	2
1024	MDXMAxx-132-12	219	16.50	5.50	0.86	13.00	1450	11.00	50	400	0.84	6	300	1.5	2
1025	MDXMAxx-132-12	259	28.65	9.70	0.86	13.00	2555	19.10	87	400	0.83	6	300	1.3	2
1026	MDXMAxx-132-22	220	21.90	7.50	0.80	11.00	1450	14.60	50	400	0.85	6	300	1.5	2
1027	MDXMAxx-132-22	260	38.10	13.20	0.80	11.00	2555	25.40	87	400	0.84	6	300	0.95	1.8
1028	MDXMAxx-160-22	221	31.50	11.00	0.50	7.00	1460	21.00	50	400	0.85	6	300	1.9	2.2
1029	MDXMAxx-160-22	261	54.75	19.30	0.50	7.00	2565	36.50	87	400	0.85	6	300	1	2
1030	MDXMAxx-160-32	222	41.70	15.00	0.40	5.50	1460	27.80	50	400	0.87	6	300	1.7	2.5
1031	MDXMAxx-160-32	262	72.60	26.40	0.40	5.50	2565	48.40	87	400	0.86	6	300	1	1.8

Information on the motor nameplate		Motor data													
Field		C0086	C0022	C0081	C0084	C0085	C0087	C0088	C0089	C0090	C0091	C0070	C0071	C0075	C0076
C86	Type		Imax [A]	P_r [kW]	R_s [Ω]	Lσ [mH]	n_N [rpm]	IN [A]	f_r [Hz]	U_r [V]	cos φ	V_{pn}	T_{nn}	V_{pi}	T_{ni}
1032	MDXMAxx-180-12	223	49.20	18.50	0.40	4.00	1470	32.80	50	400	0.90	6	300	1.4	1.7
1033	MDXMAxx-180-12	263	86.70	32.40	0.40	4.00	2575	57.80	87	400	0.89	6	300	1	1.7
1034	MDXMAxx-180-22	224	58.20	22.00	0.20	3.80	1456	38.80	50	400	0.90	6	300	1	1.5
1035	MDXMAxx-180-22	264	101.1	38.70	0.20	3.80	2560	67.40	87	400	0.89	6	300	1	1.5
1036	MDXMAXM-63-12	210	0.68	0.12	87.58	610.53	1390	0.45	50	400	0.65	6	300	1.5	10
1037	MDXMAXM-63-12	250	1.17	0.21	87.58	610.53	2500	0.78	87	400	0.65	6	300	1.5	10
1038	MDXMAXM-63-32	210	0.98	0.18	56.90	342.11	1400	0.65	50	400	0.65	6	300	1.5	10
1039	MDXMAXM-63-32	250	1.70	0.31	56.90	342.11	2510	1.13	87	400	0.65	6	300	1.5	10
1040	MDXMAXM-112-32	219	18.75	5.50	0.86	7.20	1440	12.50	50	400	0.78	6	300	1.5	10
1041	MDXMAXM-112-32	259	32.55	9.60	0.86	7.20	2550	21.70	87	400	0.78	6	300	1.5	10
1042	MDXMAXM-132-22	220	25.20	7.50	0.54	4.80	1460	16.80	50	400	0.77	6	300	1.5	10
1043	MDXMAXM-132-22	260	43.80	13.10	0.54	4.80	2570	29.20	87	400	0.77	6	300	1.5	10
1044	MDXMAXM-132-32	221	29.25	9.20	0.46	4.70	1450	19.50	50	400	0.85	6	300	1.5	10
1045	MDXMAXM-132-32	261	50.70	16.00	0.46	4.70	2560	33.80	87	400	0.85	6	300	1.5	10
1046	MDXMAXM-160-22	260	31.50	11.00	1.27	18.97	1466	21.00	50	400	0.86	6	300	1.5	10
1047	MDXMAXM-160-32	260	42.30	15.00	0.87	14.28	1466	28.20	50	400	0.87	6	300	1.5	10
1048	MDXMAXM-180-22	260	54.60	18.50	0.40	4.00	1440	36.40	50	400	0.87	6	300	1.5	10
1049	MDXMAXM-180-32	260	66.15	22.00	0.20	3.80	1465	44.10	50	400	0.85	6	300	1.5	10
1050	MDXMAXM-200-32	260	90.00	30.00	0.17	3.50	1455	60.00	50	400	0.85	6	300	1.5	10
1051	MDXMAXM-225-12	260	108.0	37.00	0.15	2.00	1460	72.00	50	400	0.86	6	300	1.5	10
1052	MDXMAXM-225-22	260	128.25	45.00	0.15	2.00	1475	85.50	50	400	0.84	6	300	1.5	10
1053	MDXMAXM-063-11	210	1.43	0.18	51.00	273.7	2760	0.95	50	400	0.80	6	300	1.5	10
1054	MDXMAXM-063-31	210	1.65	0.25	33.00	93.4	2760	1.10	50	400	0.83	6	300	1.5	10
1055	MDXMAXM-071-11	211	1.50	0.37	22.50	90.2	2840	1.00	50	400	0.78	6	300	1.5	10
1056	MDXMAXM-071-31	212	2.25	0.55	16.90	62.9	2840	1.50	50	400	0.82	6	300	1.5	10
1057	MDXMAXM-080-11	213	2.85	0.75	11.36	47.4	2850	1.90	50	400	0.80	6	300	1.5	10
1058	MDXMAXM-080-31	214	4.20	1.10	6.86	33.4	2810	2.80	50	400	0.82	6	300	1.5	10
1059	MDXMAXM-090-11	215	4.80	1.50	5.10	22.2	2840	3.20	50	400	0.85	6	300	1.5	10
1060	MDXMAXM-090-31	216	7.20	2.20	3.20	14.5	2840	4.80	50	400	0.86	6	300	1.5	10
1061	MDXMAXM-100-31	217	9.30	3.00	1.81	10.7	2850	6.20	50	400	0.88	6	300	1.5	10
1062	MDXMAXM-100-41	218	12.75	4.00	1.45	8.6	2830	8.50	50	400	0.85	6	300	1.5	10
1063	MDXMAXM-112-31	250	18.30	5.50	3.10	17	2890	12.20	50	400	0.83	6	300	1.5	10
1064	MDXMAXM-112-41	250	23.25	7.50	1.96	12	2900	15.50	50	400	0.87	6	300	1.5	10
1065	MDXMAXM-132-21	250	28.05	9.00	1.41	11.292	2925	18.70	50	400	0.89	6	300	1.5	10
1066	MDXMAXM-071-13	210	1.13	0.18	58.93	342	870	0.75	50	400	0.71	6	300	1.5	10
1067	MDXMAXM-071-13	250	1.95	0.31	58.93	342	1610	1.30	87	400	0.71	6	300	1.5	10
1068	MDXMAXM-071-33	210	1.50	0.25	37.90	116.8	920	1.00	50	400	0.63	6	300	1.5	10
1069	MDXMAXM-071-33	250	2.55	0.43	37.90	116.8	1660	1.70	87	400	0.63	6	300	1.5	10
1070	MDXMAXM-080-13	211	2.10	0.37	28.00	112.7	900	1.40	50	400	0.67	6	300	1.5	10
1071	MDXMAXM-080-13	251	3.60	0.64	28.00	112.7	1640	2.40	87	400	0.67	6	300	1.5	10
1072	MDXMAXM-080-33	212	2.85	0.55	16.60	78.6	900	1.90	50	400	0.68	6	300	1.5	10
1073	MDXMAXM-080-33	252	4.95	0.95	16.60	78.6	1640	3.30	87	400	0.68	6	300	1.5	10
1078	MDFMAxx-250-22	224	147.75	55.00	0.04	1.92	1475	98.50	50	400	0.86	6	300	1	2
1079	MDFMAxx-250-22	264	255.90	95.00	0.04	1.92	2585	170.60	87	400	0.86	6	300	1	2
1080	MDEBAXM-063-12	210	0.68	0.12	87.58	610.53	1390	0.45	50	400	0.65	6	300	1.5	10
1081	MDEBAXM-063-12	250	1.17	0.21	87.58	610.53	2500	0.78	87	400	0.65	6	300	1.5	10
1082	MDEBAXM-063-32	210	0.98	0.18	56.90	342.11	1400	0.65	50	400	0.65	6	300	1.5	10
1083	MDEBAXM-063-32	250	1.70	0.31	56.90	342.11	2510	1.13	87	400	0.65	6	300	1.5	10
1084	MDEBAXM-071-12	210	1.35	0.25	39.90	157.20	1390	0.90	50	400	0.64	6	300	3.6	2
1085	MDEBAXM-071-12	250	2.34	0.43	39.90	157.20	2500	1.56	87	400	0.64	6	300	2	2
1086	MDEBAXM-071-32	211	1.95	0.37	25.03	122.60	1380	1.30	50	400	0.64	6	300	3.4	2
1087	MDEBAXM-071-32	251	3.38	0.64	25.03	122.60	2490	2.25	87	400	0.64	6	300	2.5	2
1088	MDEBAXM-080-12	212	2.40	0.55	20.69	89.00	1400	1.60	50	400	0.68	6	300	3.2	2

Information on the motor nameplate		Motor data													
Field		C0086	C0022	C0081	C0084	C0085	C0087	C0088	C0089	C0090	C0091	C0070	C0071	C0075	C0076
C86	Type		Imax [A]	P_r [kW]	R_s [Ω]	Lσ [mH]	n_N [rpm]	IN [A]	f_r [Hz]	U_r [V]	cos φ	V_{pn}	T_{nn}	V_{pi}	T_{ni}
1089	MDEBAXM-080-12	252	4.16	0.95	20.69	89.00	2510	2.77	87	400	0.68	6	300	1.6	2
1090	MDEBAXM-080-32	213	3.00	0.75	11.69	65.20	1400	2.00	50	400	0.72	6	300	3.5	2
1091	MDEBAXM-080-32	253	5.20	1.30	11.69	65.20	2510	3.46	87	400	0.72	6	300	1.9	3
1092	MDEBAXM-090-12	214	4.05	1.10	6.40	37.00	1420	2.70	50	400	0.77	6	300	2.5	2
1093	MDEBAXM-090-12	254	7.05	2.00	6.40	37.00	2535	4.70	87	400	0.77	6	300	2	2
1094	MDEBAXM-090-32	215	5.40	1.50	4.80	26.00	1415	3.60	50	400	0.77	6	300	2	2
1095	MDEBAXM-090-32	255	9.30	2.70	4.80	26.00	2530	6.20	87	400	0.77	6	300	1	2
1096	MDEBAXM-100-12	216	7.20	2.20	2.90	20.00	1425	4.80	50	400	0.80	6	300	1	1.5
1097	MDEBAXM-100-12	256	12.45	3.90	2.90	20.00	2535	8.30	87	400	0.80	6	300	0.8	1.5
1098	MDEBAXM-100-32	217	9.90	3.00	2.10	17.00	1415	6.60	50	400	0.81	6	300	2.5	1.5
1099	MDEBAXM-100-32	257	17.10	5.35	2.10	17.00	2530	11.40	87	400	0.81	6	300	1.4	1.8
1100	MDEBAXM-112-22	218	12.45	4.00	1.50	11.00	1435	8.30	50	400	0.82	6	300	2	2
1101	MDEBAXM-112-22	258	21.45	7.10	1.50	11.00	2545	14.30	87	400	0.82	6	300	1	2
1102	MDEBAXM-112-32	219	17.85	5.50	2.71	21.40	1425	11.90	50	400	0.84	6	300	1.5	10
1114	MDFMAxx-200-32	224	83.25	30.00	–	–	1465	55.50	50	400	0.85	6	300	1	2
1115	MDFMAxx-200-32	264	145.50	52.00	–	–	2575	97.00	87	400	0.85	6	300	1	2

6.6.3 Motor temperature monitoring with PTC or thermal contact

Description

PTC resistors according to DIN 44081 and DIN 44082 can be connected via the terminal inputs T1 and T2. The motor temperature is measured and integrated into the drive monitoring.

A thermal contact (NC contact) can also be connected to T1 and T2. Lenze three-phase AC motors provide thermal contacts as default.

When using motors equipped with PTC resistors or thermostats, we recommend to always activate the PTC input. This prevents the motor from being destroyed by overheating.

Stop!

- ► The motor temperature monitoring may only be connected to T1, T2 if the cable is terminated with a PTC or thermal contact (NC contact) on the motor side.
  - – An ”open” cable acts like an antenna and can cause faults on the drive controller.
  - – Input signals at T1, T2 are processed with a delay of 2 s.
- ► The drive controller can only evaluate one PTC resistor! Do not connect several PTC resistors in series or in parallel:
  - – The motor temperature would be measured incorrectly.
  - – The motors could be destroyed by overheating.
- ► If you operate several motors on a drive controller, use thermal contacts (NC contacts) for motor temperature monitoring and connect these in series.
- ► To achieve full motor protection, an additional temperature monitoring with separate evaluation must be installed.

Codes for parameter setting

Code		Possible settings			IMPORTANT	
No.	Name	Lenze	Selection			
C0585	MONIT OH8	3	0	TRIP	Configuration of motor temperature monitoring ● Temperature monitoring via PTC input (T1, T2)	📖 6.6-8 See System Manual (extension)
			2	Warning		
			3	Off		

Activation

Note!

► In the Lenze setting the motor temperature monitoring is switched off!

► If you work with several parameter sets, the monitoring must be activated separately in each parameter set!

1. Connect the monitoring circuit of the motor to T1 and T2.
   – With 1.6 kΩ < R < 4 kΩ, the monitoring responds.
2. Set the controller reaction:
   – C0585 = 3: Temperature monitoring of the motor is switched off.
   – C0585 = 0: TRIP error message (display of keypad: OH8 Trip)
   – C0585 = 2: Warning signal (display of keypad: OH8 Warn)

Function test

Connect the PTC input with a fixed resistor:

► R > 4 kΩ: The fault message OH8 must be activated.

► R < 1 kΩ: Fault message must not be activated.

6.6.4 Motor temperature monitoring with KTY

Description

Via the incremental encoder connection X8 a KTY resistor can be connected to pin X8/5 and X8/8. The motor temperature is detected and integrated in the drive monitoring.

The KTY resistor is monitored with regard to interruption and short circuit.

We recommend to always activate the KTY input when using motors which are equipped with KTY resistors. This serves to prevent the motor from being destroyed by overheating.

Stop!

- ► The controller can only evaluate one KTY resistor! Do not connect several KTY resistors in series or parallel:
  – The motor temperature would be measured incorrectly.
  – The motors could be destroyed by overheating.
- ► If several motors are operated on one controller, use thermal contacts (NC contacts) connected in series for motor temperature monitoring.
- ► To achieve full motor protection, an additional temperature monitoring with separate evaluation must be installed.

Codes for parameter setting

Code		Possible settings				IMPORTANT	
No.	Name	Lenze	Selection				
C0121	OH7 limit	150	45	{1 °C}	150	Setting of the operating temperature for monitoring OH7 ● Only for KTY at X8 ● Monitoring OH7 is configured in C0584	📖 6.6-10 See System Manual (extension)
C0583	MONIT OH3	3	0	TRIP		Configuration of motor temperature monitoring with fixed operating temperature ● Only for KTY at X8 ● The operating temperature is fixed at 150 °C	📖 6.6-10 See System Manual (extension)
			2	Warning			
			3	Off			
C0584	MONIT OH7	3	2	Warning		Configuration of monitoring motor temperature with variable operating temperature ● Only for KTY at X8 ● When reaching the temperature set in C0121 the warning OH7 is activated	📖 6.6-10 See System Manual (extension)
			3	Off			

Code		Possible settings			IMPORTANT	
No.	Name	Lenze	Selection			
C0594	MONIT SD6	3	0	TRIP	Activation of the motor temperature monitoring with KTY at X8 ● Use C0594 = 0 or 2 to activate monitoring ● In case of a short circuit or interruption at X8/5 and X8/8 the fault message SD6 is activated ● Configuration of the response when exceeding the motor temperature – Fixed operating temperature in C0583 – Variable operating temperature in C0584	📖 6.6-10 See System Manual (extension)
			2	Warning		
			3	Off		

Activation

Note!

► In the Lenze setting, the motor temperature monitoring is switched off!

► If you work with several parameter sets, the monitoring must be activated separately in each parameter set!

Use C0594 = 0 or C0594 = 2 to activate the motor temperature monitoring via X8. In addition, the connection is monitored for short circuit and interruption.

1. Connecting the monitoring circuit of the motor to X8/5 and X8/8.
2. Setting controller reaction to short circuit or interruption of the connection:
   – C0594 = 3: Monitoring is switched off.
   – C0594 = 0: TRIP error message (display of keypad: Sd6 Trip)
   – C0594 = 2: Warning signal (display of keypad: Sd6 Warn)

Adjustment

Monitoring with a fixed operating temperature (150 °C)

1. Set response of the controller:
   – C0583 = 3: temperature monitoring of the motor switched off.
   – C0583 = 0: TRIP error message (keypad display: OH3 Trip)
   – C0583 = 2: warning signal (keypad display: OH3 Warn)

Monitoring with a variable operating temperature (45...150 °C)

1. Set the operating temperature in C0121.
2. Set response of the controller:
   – C0584 = 3: temperature monitoring of the motor switched off.
   – C0584 = 2: warning signal (keypad display: OH7 Warn)

Adjustment of KTY operating range

The temperature and resistance range can be adapted to the KTY used.

- ► C1190 = 0: Fixed operating range for KTY in Lenze motors (Lenze setting)
- ► C1190 = 1: Adjustable operating range

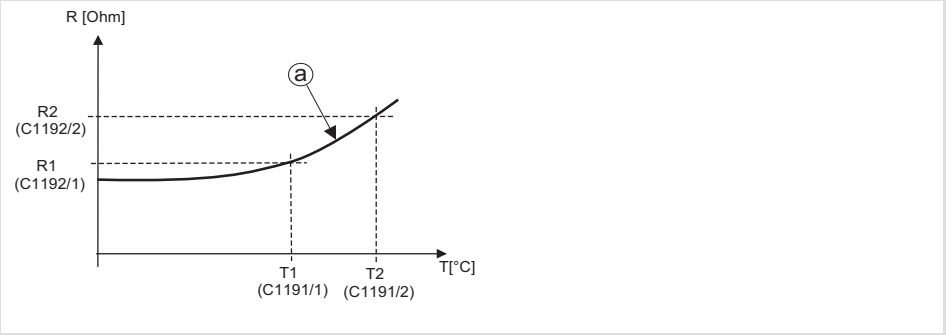

Fig. 6.6-3 Setting of the operating range for the KTY (C1190 = 1)

The operating range is specified by means of limit values and is in the almost linear section of the graph (a). The operating values are determined by interpolation.

C1191/1 C1191/2	Setting of the lower and upper temperature value (T1, T2) corresponding to the KTY used.
C1192/1 C1192/2	Setting of the lower and upper resistance value corresponding to the KTY used.

6.6.5 Current limits

Description

The controllers are provided with a current limit value control which determines the dynamic behaviour under load. The resulting utilisation is compared to the current limit value set under C0022 for motor load and under C0023 for generator load. If the current limit values are exceeded, the controller changes its dynamic behaviour.

Controller performance when a limit value is reached

Motor overload during acceleration:

The controller extends the acceleration ramp.

Generator overload during deceleration:

The controller extends the deceleration ramp.

With increasing load and constant speed:

► When the current limit of the motor mode is reached:
- The controller reduces the speed up to 0 min^{-1} .
- The controller cancels the change of the speed if the load falls below the limit value again.

► When the current limit in the generator mode is reached:
- The controller increases the speed up to the maximum speed (C0011).
- The controller cancels the change of the speed if the load falls below the limit value again.

► If a sudden load is built up at the motor shaft (e. g. the drive is blocked), the overcurrent disconnection can respond (fault message OCx).

Codes for parameter setting

Code		Possible settings				IMPORTANT	
No.	Name	Lenze	Selection				
C0022	IMAX CURRENT	→	0	{0.01 A}	-	I_{max} limit in motor mode → Depending on C0086	📖 6.6-13
C0023	Imax gen.	→	0	{0.01 A}	-	I_{max} limit in generator mode → Depending on C0086	📖 6.6-13

Adjustment

- ► Set the acceleration and deceleration times so that the drive can follow the speed profile without reaching I_{max} of the drive controller.
- ► A correct current control in generator mode is only possible with an external brake resistor.
- ► Drive behaviour with overload in motor or generator mode (C0054 > C0022 or C0023):
  - – The drive controller reduces the speed up to 0 min^{-1}.
  - – The drive controller cancels the change of the speed if the load falls below the limit value again.
- ► When operating with a switching frequency > 8 kHz or 4 kHz, C0022 and C0023 must be adapted to the permissible output currents (Derating).
- ► Correct current (C0075, C0076) in generator mode is only possible with connected brake chopper or DC-bus operation with energy exchange.

6.6.6 Automatic collection of motor data

Description

The motor data identification serves to detect the required motor data and influences of the motor cable.

Before executing the identification you must manually enter the motor data from the motor nameplate into the corresponding codes.

Vector control (C0006 = 1)

In the vector control mode the motor data identification must be executed before initial commissioning.

- ► In case of vector control without temperature feedback, the heating of the motor in the motor model is not taken into consideration.
- ► In case of vector control with thermal sensor KTY a motor temperature of 20 °C in the motor model is considered.

  Important: The temperature feedback must be activated (C0594 = 0 or C0594 = 2) before you execute the motor data identification.

V/f characteristic control (C0006 = 5)

In the Lenze setting, the controllers are defined for a power-adapted motor with 10 m of motor cable. Therefore the motor data identification is not essential.

- ► The identification of the motor data also influences the smooth running behaviour. When identifying the motor data for this operating mode, you can optimise the smooth running behaviour at low speeds.

Codes for parameter setting

Code		Possible settings				IMPORTANT	
No.	Name	Lenze	Selection				
C0084 STOP	Mot Rs	→	0.00	{0.01 mΩ}	100000.00	Motor stator resistance → Value is determined by motor parameter identification (C0148, C0149)	📖 6.6-1 📖 6.6-14
C0087 STOP	Mot speed	→	50	{1 rpm}	36000	Rated motor speed → depending on C0086 ● Motor selection in C0086 set the corresponding rated motor speed in C0087 ● Change of C0087 sets C0086 = 0	📖 6.6-1
C0088 STOP	MOT CURRENT	→	0.5	{0.1 A}	500.0	Rated motor current → Depending on C0086 ● Selection of a motor in C0086 sets the corresponding rated motor current in C0088 ● Change of C0088 sets C0086 = 0	📖 6.6-1
C0089 STOP	Mot frequency	→	10	{1 Hz}	5000	Rated motor frequency → depending on C0086 ● Motor selection in C0086 sets the corresponding rated motor frequency in C0089 ● Change of C0089 sets C0086 = 0	📖 6.6-1
C0090 STOP	Mot voltage	→	0	{1 V}	1000	Rated motor voltage → depending on C0086 ● Motor selection in C0086 sets the corresponding rated motor voltage in C0090 ● Change of C0090 sets C0086 = 0	📖 6.6-1
C0091 STOP	Mot cos phi	→	0.50	{0.01 }	1.00	Motor cos φ → depending on C0086 ● Motor selection in C0086 sets the corresponding motor cos φ in C0091 ● Change of C0091 sets C0086 = 0	📖 6.6-1
C0092 STOP	Mot Ls	→	0.0	{0.1 mH}	6500.0	Motor stator inductance → Value is evaluated by motor parameter identification from C0088, C0089, C0090 and C0091 → Selection of a motor in C0086 sets the corresponding stator inductance value in C0092	📖 6.6-1

Code		Possible settings				IMPORTANT	
No.	Name	Lenze	Selection				
C0148 STOP	ident run	0	0	WRK stop	Ready	Motor data identification 1. Inhibit controller, wait until drive has stopped 2. Enter the correct values of the motor nameplate into C0087, C0088, C0089, C0090, C0091 3. Set C0148 = 1, confirm with ENTER 4. Enable controller The identification – starts, IMP goes off. The motor "whistles" but does not rotate! – lasts approx. 1 ... 2 min – is completed when IMP is lit again 5. Inhibit controller:	📖 6.6-14
			1	WRK run	Start identification		
C0149 STOP	Auto ident	0	0	Id inactive	Automatic identification is inactive	Automatic motor data identification 1. Inhibit controller, wait until drive has stopped 2. Enter the correct values of the motor nameplate into C0087, C0088, C0089, C0090, C0091 3. Set C0149 = 1, confirm with ENTER 4. Enable controller The identification – starts, IMP goes off. The motor "whistles" but does not rotate! – lasts approx. 1 ... 2 min – is completed when IMP is lit again 5. Inhibit controller:	📖 6.6-14
			1	Id active	Automatic identification is active ● The identification starts automatically after controller enable ● After a faulty identification, the process is restarted after TRIP RESET or mains switching and subsequent controller enable		

Adjustment

The identification is only executed for the parameter set which is activated at the moment:

► If you want to identify the motor data for another parameter set, you must switch to this parameter set and restart the identification.

Note!

► During the identification the motor is supplied with current. The motor does not rotate.

► The load machine can remain to be connected. Existing holding brakes can be kept in the braking position.

► If the motor is idling, a small phase offset may occur at the motor shaft.

1. Enter C0087, C0088, C0089, C0090 and C0091 of your motor (see nameplate):
   – It is vital to enter the correct values since these entries influence important parameters such as slip compensation and no-load current.
   – Enter the values according to the connection method (star or delta) for the rated motor current (C0088) and rated motor voltage (C0090).

Manual motor data identification (C0148)

1. Inhibit the controller. Wait until drive stands still.
2. Select C0148 = 1, confirm with ENTER.
3. Enable the controller. The identification starts.
   – The green LED at the controller is blinking very fast.
   – ”WRK run” is displayed at the keypad.
   – The rotor resistance is calculated and saved in C0082.
   – The motor stator resistance is detected and saved in C0084.
   – The motor leakage inductance is measured and saved in C0085.
   – The inverter compensation characteristic is calculated from the measured motor stator resistance and saved in C1751/1 ... C1751/17.
   – The motor stator inductance is calculated from the entered data and saved in C0092.
   – The identification takes approx. 1 ... 2 min (dependent on the rated motor power).
   – The identification is completed when the green LED at the controller is lit (keypad, GDC: IMP is active).
4. Inhibit the controller.

If the motor data identification has been completed incorrectly

If the identification is incorrect, the fault ID1 or ID2 is displayed.

► If the motor data identification is incorrect, the process must be repeated from step 2.

Automatic motor data identification (C0149)

The automatic motor data identification is suitable for standard and replacement devices which are pre-parameterised in the workshop and commissioned on site:

► Enter the motor data of the motor nameplate, set C0149 = 1 and save the settings.

► The motor data identification is started with the first controller enable. After a successful identification the settings are automatically saved in the parameter set 1.

1. Inhibit controller (X5/28 = LOW).
2. Switch on the mains.
3. Select a Lenze motor under C0086 or enter motor data of the nameplate.
4. If required, select C0149 = 1 and confirm with ENTER.
5. Enable the controller. The identification starts.
   – The green LED at the controller is blinking very fast.
   – ”WRK run” is displayed at the keypad.
   – The rotor resistance is calculated and saved in C0082.
   – The motor stator resistance is detected and saved in C0084.
   – The motor leakage inductance is measured and saved in C0085.
   – The inverter compensation characteristic is calculated from the measured motor stator resistance and saved in C1751/1 ... C1751/17.
   – The motor stator inductance is calculated from the entered data and saved in C0092.
   – The identification takes approx. 1 ... 2 min (dependent on the rated motor power).
   – The identification is completed when the green LED at the controller is lit (keypad, GDC: IMP is active).
   – Controller is inhibited.
   – If required, select C0149 = 0 and confirm with ENTER. The automatic motor data identification is deactivated.
6. Inhibit the controller.

If the motor data identification has been completed incorrectly

If the identification is incorrect, the fault ID or ID is displayed.

1. Acknowledge fault with TRIP RESET or switch the mains.
2. Enable the controller. The identification restarts.

6.7 Setting the speed feedback

Description

For speed monitoring, the feedback signal via incremental encoder can either be supplied via input X8 or X9.

► At input X8 you can only attach an incremental encoder with TTL-levels.

► Incremental encoders with HTL-level can only be connected to input X9.

The incremental encoder signal can be output for slaves at the digital frequency output X10.

The master frequency input (DFIN) and master frequency output (DFOUT) are described in the chapter ”Function library”.

Note!

You can use maximally two of the three interfaces X8, X9, X10 at the same time. This may lead to the fact that the incremental encoder input cannot be activated or the master frequency input or master frequency output does not work.

► This does not apply if the input signal at X8 or X9 is directly output to master frequency output X10 (C0540 = 4 or 5).

► To deactivate the master frequency input, the internal signal connection of function block DFIN to the following function block must be removed. Remove the function block DFIN from the processing table.

Codes for parameter setting

Code		Possible settings				IMPORTANT	
No.	Name	Lenze	Selection				
C0025 STOP	Feedback type	1				Speed feedback	📖 6.7-1
			1	no feedback	No feedback		
			100	IT (C420) - X8	Input of the number of increments in C0420	Incremental encoder at X8 ● Incremental encoders with TTL level can only be connected to X8.	
			101	IT (C420) - X9	Input of the number of increments in C0420	Incremental encoder at X9 ● Connect incremental encoders with HTL-level on X9 only	
					Number of increments:	Incremental encoder at X8 ● Incremental encoders with TTL level can only be connected to X8.	
			110	IT512-5V	512 inc		
			111	IT1024-5V	1024 inc		
			112	IT2048-5V	2048 inc		
			113	IT4096-5V	4096 inc		

Code		Possible settings				IMPORTANT	
No.	Name	Lenze	Selection				
C0420 STOP	Encoder const	512	1	{1 inc/rev}	8192	Number of increments for incremental encoder at X8 or X9 ● Connect incremental encoders with HTL-level on X9 only	📖 6.7-1
C0421 STOP	Enc voltage	5.00	5.00	{0.1 V}	8.00	Supply voltage for the incremental encoder at X8 **CAUTION! A wrong entry can destroy the incremental encoder!**	

6.7.1 Incremental encoder with TTL level at X8

On X8, only incremental encoders with TTL level can be operated. Wiring diagram and pin assignment of X8 are described in chapter ”Wiring of the standard device” → ”Wiring of the feedback system”.

Activation

► C0025 = 100. In addition, you have to set the number of increments in C0420.

► C0025 = 110, 111, 112 or 113. The number of increments (512, 1024, 2048 or 4096) is automatically set.

Adjustment

The incremental encoder is supplied with voltage by the drive controller.

> **Stop!**
> If the supply voltage is too high, it may destroy the incremental encoder.

Under C0421 you can adjust the supply voltage V_{CC} (5 V) of the incremental encoder in order to compensate for the voltage drop along the incremental encoder cable (if required).

Calculation of the voltage drop

$$\Delta U \approx l\,[m] \cdot \frac{R\,[\Omega]}{[m]} \cdot I_{Inc}\,[A]$$

l	Length of the incremental encoder cable
R	Resistance of the incremental encoder cable
I_{Inc}	Current consumption of the incremental encoder

6.7.2 Incremental encoder with HTL level at X9

On X9, incremental encoders with HTL level can be operated. Wiring diagram and pin assignment of X9 are described in chapter ”Wiring of the standard device” → ”Wiring of the feedback system”.

Activation

► C0025 = 101. In addition, you have to set the number of increments in C0420.

Adjustment

The incremental encoder must be operated with an external supply voltage. C0421 has no influence.

► Incremental encoders with HTL level require DC 8 ... 30 V supply voltage. Please observe the information by the manufacturer.

6.8 Operating mode

Description

The control mode of the controller can be selected via the operating mode. You can select between the following modes:

- ► V/f characteristic control
- ► Vector control

Selection of the correct operating mode

The V/f characteristic control is the classic operating mode for standard applications.

When using the vector control you will achieve improved drive features compared to the V/f characteristic control due to:

- ► Higher torque via the complete speed range
- ► Higher speed accuracy and higher concentricity factor
- ► Higher efficiency

Speed/ torque characteristics

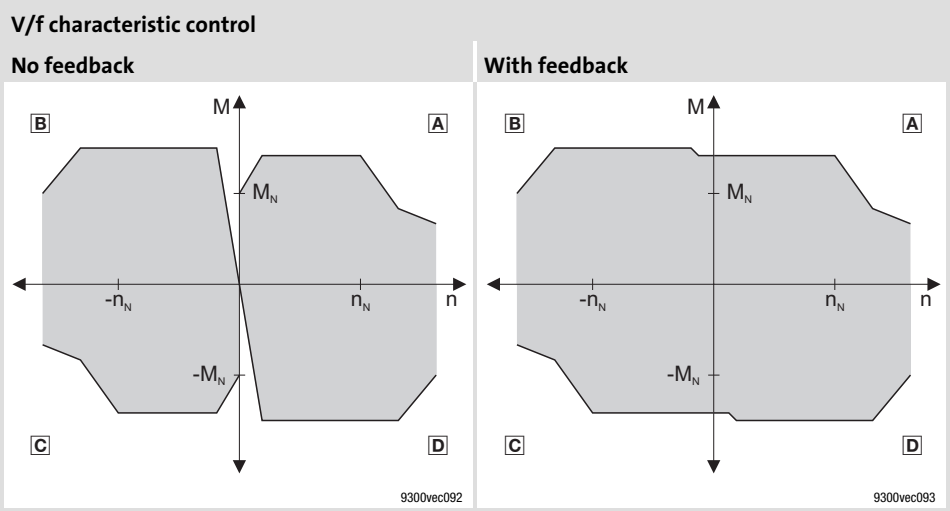

Fig. 6.8-1 Speed/ torque characteristics

- A Operation in motor mode (CW rotation)
- B Operation in generator mode (CCW rotation)
- C Operation in motor mode (CCW rotation)
- D Operation in generator mode (CW rotation)

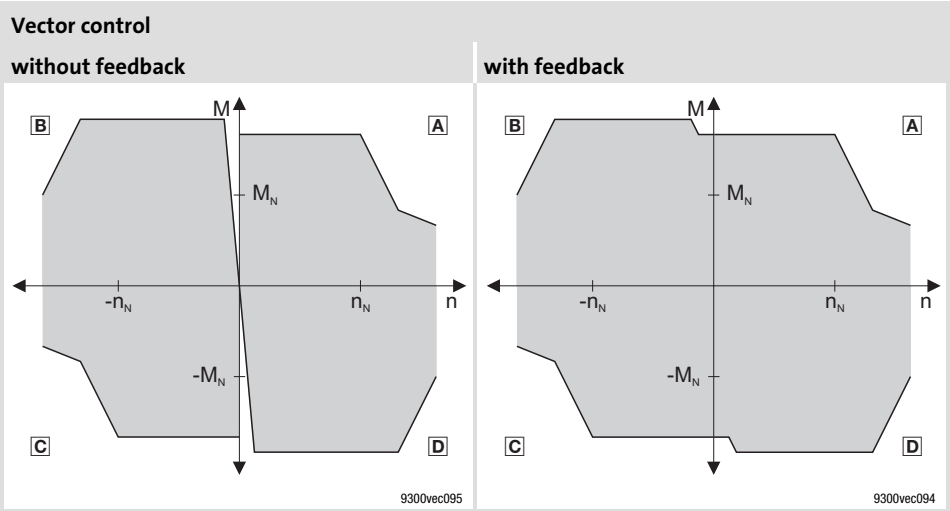

Fig. 6.8-2 Speed/ torque characteristics

- A Operation in motor mode (CW rotation)
- B Operation in generator mode (CCW rotation)
- C Operation in motor mode (CCW rotation)
- D Operation in generator mode (CW rotation)

Operating modes recommended for standard applications

The following table helps you to find the correct operating mode for standard applications:

► C0006 = 5: V/f characteristic control with constant U_{min} boost

► C0006 = 1: vector control

Power range 0.37 ... 90 kW	Selection of the operating mode in C0006			
	Motor cable shielded ≤ 50 m unshielded ≤ 100 m		Motor cable shielded > 50 m unshielded > 100 m	
	recommended	alternatively	recommended	alternatively
Single drives				
With constant load	1	5	5	-
With extremely alternating loads	1	5	5	-
With high starting duty	1	5	5	-
Positioning and infeed drives with high dynamics	1	5	5	-
Rewinder with dancer	1	5	-	-
Unwinder with dancer	5	-	-	-
Pump and fan drives [1)]	5	-	5	-
Three-phase AC reluctance motors	5	-	5	-
Three-phase AC sliding rotor motors	5	-	5	-
Three-phase AC motors with fixed voltage/frequency characteristic	5	-	5	-
Group drives (the resulting motor cable length l_{res}) is decisive	$l_{res} = \sqrt{i} \cdot (l_1 + l_2 + ... + l_i)$			
Identical motors and identical loads	1	5	5	-
Different motors and/or alternating loads	5	-	5	-

[1)] For this application we recommend a quadratic voltage characteristic (C0014 = 1)

Note!

Only switch between the operating modes if the controller is inhibited!

6.8.1 V/f characteristic control

Description

The output voltage of the controller follows a defined characteristic. At low output frequencies, the characteristic can be boosted. It can be adapted to different load profiles.

► Linear characteristic for drives with constant load torque over the speed.

► Quadratic characteristic for drives with quadratic load torque over the speed:

– Quadratic V/f characteristics are preferably used in centrifugal pump and fan drives. However, it must be checked whether your pump or fan drive can be operated in this operating mode!

– If your pump or fan drive cannot be used for the operation with a quadratic V/f characteristic, the linear V/f characteristic or vector control mode must be used.

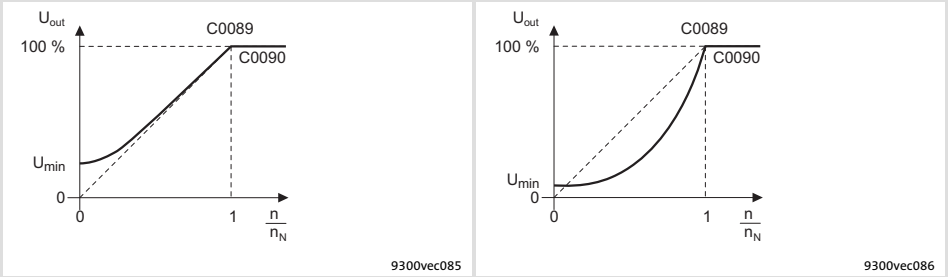

Fig. 6.8-3 Linear and square-law V/f characteristic

Codes for parameter setting

Code		Possible settings				IMPORTANT	
No.	Name	Lenze	Selection				
C0006 STOP	Op mode	5				Selection of the operating mode for the motor control	
			1	vector ctrl	Vector control without or with speed feedback	**In case of the first selection enter the motor data and identify them with C0148.**	📖 6.8-8
			5	V / f	V/f characteristic control	Commissioning without identification of the motor data is possible ● Advantage of identification with C0148: Improved smooth running at low speeds	📖 6.8-4
C0014	V/f charact.	0				Characteristic in the V/f characteristic control mode	📖 8.2-25
			0	Linear		Linear V/f characteristic	
			1	square		Square V/f characteristic	
C0015	Rated freq	50	10	{1 Hz}	5000	V/f-rated frequency In C0015 you can set a base frequency which differs from the rated motor frequency (C0089) ● Lenze setting: C0015 = C0089 ● Changing C0086 or C0089 overwrites the value in C0015	📖 8.2-25

Code		Possible settings				IMPORTANT	
No.	Name	Lenze	Selection				
C0016	Umin boost	0.00	0.00	{0.01 %}	100.00	U_{min} boost (FCODE) ● C0016 = 1 % corresponds to a boost of 1 % of the rated motor voltage (C0090) ● Code is freely configurable	📖 6.8-4
C0021	slipcomp	→	-20.00	{0.01 %}	20.00	Slip compensation → Change of C0086, C0087 or C0089 sets C0021 to the calculated rated slip of the motor ● When changing over to the vector control mode, C0021 is set to 0	📖 6.11-1 📖 8.2-25 📖 8.2-48
C0090 STOP	Mot voltage	→	0	{1 V}	1000	Rated motor voltage → depending on C0086 ● Motor selection in C0086 sets the corresponding rated motor voltage in C0090 ● Change of C0090 sets C0086 = 0	📖 6.6-1

Adjustment

1. Select ”V/f characteristic control” mode (C0006 = 5, factory adjustment).
2. Select V/f characteristic (C0014) if necessary
3. Enter the data of the motor nameplate.
4. If required, you can set a base frequency in C0015 which differs from the rated motor frequency (C0089).

Set U_{min} boost

Load-independent boost of the motor voltage for output frequencies below the V/f rated frequency. This serves to optimise the torque behaviour.

C0016 must be adapted to the asynchronous motor used. Otherwise the motor may be destroyed by overtemperature or the controller may be operated with overcurrent:

1. Operate the motor in idle state at 5 ... 10 % of the rated speed (n_N):
2. Increase V_{min} until you reach the following motor current:

A Motor in short-time operation up to $0.5 \cdot n_N$:
- For self-ventilated motors: $I_{motor} \approx I_{N\ motor}$
- For forced ventilated motors: $I_{motor} \approx I_{N\ motor}$

B Motor in continuous operation up to $0.5 \cdot n_N$:
- For self-ventilated motors: $I_{motor} \approx 0.8 \cdot I_{N\ motor}$
- For forced ventilated motors: $I_{motor} \approx I_{N\ motor}$

Note!

Observe for all adjusting processes the thermal behaviour of the connected asynchronous motor at low speeds:

► Usually, standard asynchronous motors with insulation class B can be driven for a short time with its rated current in the speed range up to $0.5 \cdot n_N$.

► Contact the motor manufacturer for getting the exact setting values for the max. permissible motor current of self-ventilated motors in the lower speed range.

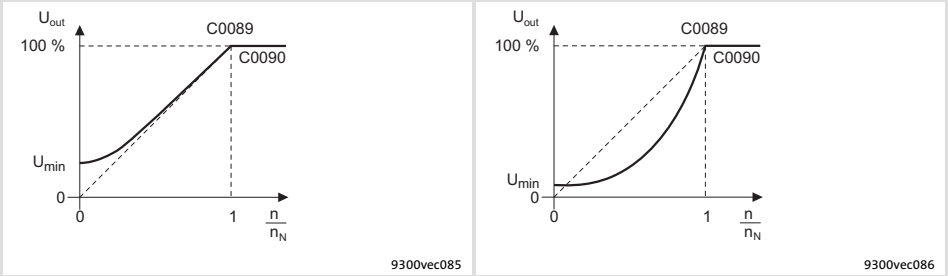

Fig. 6.8-4 Umin boost at linear and square-law V/f characteristic

Optimising V/f characteristic control

In general the V/f characteristic control can be operated without any further measures. The V/f characteristic control must only be optimised in case of the following drive behaviour:

Drive behaviour	Remedy
Does not rotate concentrically at low speeds, especially when operating with long motor cables	Executing motor identification
Problems in case of high starting duty (high mass inertia), in extreme cases, the error message OC1 occurs	Adjusting the voltage increase (C0016). ● Set C0016 so that with an enabled controller and 5 ... 10 % of the rated speed an approx. 0.8-fold ... single rated motor current flows ● 📖 6.8-6
The set voltage increase (C0016) does not result in the desired current flow (controller has problems at high starting duty, error message OC1 during acceleration).	Adapting the voltage increase with boost correction (📖 6.11-5)
Drive does not follow the speed setpoint. Reason: The current controller intervenes in the rated field frequency to limit the controller output current to the maximum current (C0022, C0023)	● Increasing acceleration / deceleration time ● Consider sufficient magnetising time of the motor. the magnetising time amounts to 0.1 ... 2 s depending on the motor power ● Increase permissible maximum current (C0022, C0023)
For operation without speed feedback (C0025 = 1): Lack of speed stability at high load (setpoint and motor speed are not proportional anymore)	● Increase slip compensation (C0021). **Important: unstable drive due to overcompensation!** ● In case of cyclic load impulses (e.g. centrifugal pump) a smoother motor characteristic can be achieved by smaller values in C0021 (maybe negative values) Note: The slip compensation is only active for operation without speed feedback.
Error messages OC1 or OC3 with short acceleration times (C0012) compared with the load (controller cannot follow the dynamic processes)	● Increase gain of the I_{max} controller (C0075) ● Reduce integral-action time of the I_{max} controller (C0076) ● Increase acceleration time (C0012)
Mechanical resonances at certain speeds	The function block NLIM1 serves to suppress those speed ranges in which resonances occur (see chapter ”Function library”).
Speed oscillations in no-load operation at speeds > $^1/_3$ rated speed	The oscillation damping minimises speed oscillations (see ”Optimising operational performance” in chapter ”Commissioning”)

6.8.2 Vector control

Description

Compared to the V/f characteristic control, the vector control serves to achieve a considerably higher torque and lower current consumption in idle state.

Note!

- ► The connected motor may be maximally two power classes smaller than the motor assigned to the drive controller.
- ► The motor data identification is essential.

Codes for parameter setting

Code		Possible settings					IMPORTANT	
No.	Name	Lenze	Selection					
C0006 STOP	Op mode	5					Selection of the operating mode for the motor control	
			1	vector ctrl		Vector control without or with speed feedback	**In case of the first selection enter the motor data and identify them with C0148.**	📖 6.8-8
			5	V / f		V/f characteristic control	Commissioning without identification of the motor data is possible ● Advantage of identification with C0148: Improved smooth running at low speeds	📖 6.8-4
C0021	slipcomp	→	-20.00		{0.01 %}	20.00	Slip compensation → Change of C0086, C0087 or C0089 sets C0021 to the calculated rated slip of the motor ● When changing over to the vector control mode, C0021 is set to 0	📖 6.11-1 📖 8.2-25 📖 8.2-48
C0075	Vp curr CTRL	0.20	0.00		{0.01 }	0.99	Gain of current controller ● Vector control: gain of current controller ● V/f characteristic control: maximum current controller	📖 8.2-25 📖 8.2-48
C0076	Tn curr CTRL	10.0	0.1		{0.1 ms}	2000.0	Integral-action time of current controller ● Vector control: integral-action time of current controller ● V/f characteristic control: maximum current controller ● C0076 = 2000 ms: current controller is switched off	📖 8.2-25 📖 8.2-48
C0077	Ti field CTRL	4.0	0.3		{0.1 ms}	6000.0	Integral-action time of field controller ● Only active in case of vector control with feedback	
C0081 STOP	Mot power	→	0.01		{0.01 kW}	500.00	Rated motor power → Change of C0086 resets value to factory setting ● Change of C0081 sets C0086 = 0	

Code		Possible settings					IMPORTANT	
No.	Name	Lenze	Selection					
C0087 STOP	Mot speed	→	50		{1 rpm}	36000	Rated motor speed → depending on C0086 ● Motor selection in C0086 set the corresponding rated motor speed in C0087 ● Change of C0087 sets C0086 = 0	📖 6.6-1
C0088 STOP	MOT CURRENT	→	0.5		{0.1 A}	500.0	Rated motor current → Depending on C0086 ● Selection of a motor in C0086 sets the corresponding rated motor current in C0088 ● Change of C0088 sets C0086 = 0	📖 6.6-1
C0089 STOP	Mot frequency	→	10		{1 Hz}	5000	Rated motor frequency → depending on C0086 ● Motor selection in C0086 sets the corresponding rated motor frequency in C0089 ● Change of C0089 sets C0086 = 0	📖 6.6-1
C0090 STOP	Mot voltage	→	0		{1 V}	1000	Rated motor voltage → depending on C0086 ● Motor selection in C0086 sets the corresponding rated motor voltage in C0090 ● Change of C0090 sets C0086 = 0	📖 6.6-1
C0091 STOP	Mot cos phi	→	0.50		{0.01 }	1.00	Motor cos φ → depending on C0086 ● Motor selection in C0086 sets the corresponding motor cos φ in C0091 ● Change of C0091 sets C0086 = 0	📖 6.6-1
C0092 STOP	Mot Ls	→	0.0		{0.1 mH}	6500.0	Motor stator inductance → Value is evaluated by motor parameter identification from C0088, C0089, C0090 and C0091 → Selection of a motor in C0086 sets the corresponding stator inductance value in C0092	📖 6.6-1
C0148 STOP	ident run	0	0	WRK stop	Ready		Motor data identification 1. Inhibit controller, wait until drive has stopped 2. Enter the correct values of the motor nameplate into C0087, C0088, C0089, C0090, C0091 3. Set C0148 = 1, confirm with ENTER 4. Enable controller The identification – starts, IMP goes off. The motor "whistles" but does not rotate! – lasts approx. 1 ... 2 min – is completed when IMP is lit again 5. Inhibit controller:	📖 6.6-14
			1	WRK run	Start identification			

Set vector control

C0006 = 1 set the vector control mode.

Note!

When setting the vector control mode, the slip compensation (C0021) is automatically set to 0.0 %.

► When you switch back to the V/f characteristic control mode, the slip compensation must be re-adapted.

Prepare the motor data identification

The motor data of the motor nameplate must be entered:

► Rated motor speed (C0087)

► Rated motor current (C0088)

► Rated motor frequency (C0089)

► Rated motor voltage (C0090)

► Motor cos φ (C0091)

Executing the motor data identification

Execute the motor data identification. (📖 6.6-14)

Optimising vector control

In general the vector control can be operated without any further measures. The vector control must only be optimised in case of the following drive behaviour:

Drive behaviour	Remedy
Operation without feedback: ● The current consumption in idle state differs widely from the rated magnetising current ($I_{mR} \approx I_N \times \sin \varphi$) . Calculate sin φ from the cos φ of the motor nameplate. ● The drive has an uneven starting performance	1. Optimise setpoint for the motor magnetising current. (📖 6.11-9) 2. Stator inductance (C0092) must be adapted after motor parameter identification. The calculation of the stator inductance by the motor data identification is based on the motor data entered before and does not consider the physical leakage of the motor and the inductive reactance of the motor cable. 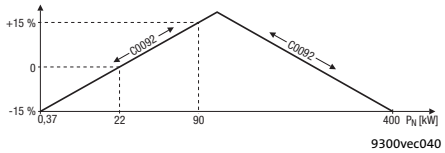 Tendency of the correction of C0092 PN: rated motor power
Lack of speed stability at high load (setpoint and motor speed are not proportional anymore)	Use C0021 (slip compensation) to change the influence of the rotor resistance (C0082) proportionally: ● Reduce the value in C0021 at an increasing speed (negative values) ● Increase the value in C0021 at a decreasing speed Note: If you activate the vector control (C0006 = 1), C0021 is automatically set to 0 %.
Unstable control at higher speeds	● Reduce the gain of the speed controller (C0070) (if required, speed-dependent adaptation via function block CURVE1 and MCTRL-VP-ADAPT) ● Control value in C0092 by comparing the current consumption in no-load operation with the rated magnetising current ($I_{mR} \approx I_N \times \sin \varphi$). ● Optimise oscillation damping (C0234 ... C0236)
Unstable control at higher speeds and high torque at high power (> 55 kW)	● Reduce gain of the I_{max} controller (C0075) or reduce gain and influence of the oscillation damping (at a power of 55 ... 90 kW). ● For operation with feedback, deactivate oscillation damping with C0234 = 0.
Unstable control in field weakening range for operation with speed feedback	● Reduce integral-action time of the field controller via C0077 ● Increase gain of the I_{max} controller (C0075)
Error messages OC1 or OC3 with short acceleration times (C0012) compared with the load (controller cannot follow the dynamic processes).	● Increase gain of the I_{max} controller (C0075) ● Reduce integral-action time of the I_{max} controller (C0076) ● Increase acceleration time (C0012)
Mechanical resonances at certain speeds	The function block NLIM1 serves to suppress those speed ranges in which resonances occur (see chapter ”Function library”).
Speed oscillations in no-load operation at speeds > $^1/_3$ rated speed	The oscillation damping minimises speed oscillations (see ”Optimising operational performance” in chapter ”Commissioning”)

6.9 Switching frequency of the inverter

Description

The switching frequency of the inverter influences the smooth running behaviour, the power loss in the controller and the noise generation in the connected motor. The Lenze setting is the optimum value for standard applications. General rule:

The lower the switching frequency the

- ► lower the power loss.
- ► higher the noise generation.
- ► better the concentricity factor.

You can select between two switching frequency modes:

Code	sine-wave modulated (sin)	flat top modulated (f_top)
C0018	0, 1, 4, 5, 6	2, 3

Note!

- ► In the flat top modulation, the concentricity factor at low speeds is lower than in the sine-wave modulation. For most standard applications a sine-wave modulated switching frequency is optimal.
- ► The maximum output frequency of the controller depends on the selected switching frequency (see C0018).
- ► When C0018 = 0 and C0018 = 6, the switching frequency is automatically changed over depending on the output current of the controller.
- ► Please note that for operation with high switching frequencies the output current must be reduced to prevent the controller from being heated inadmissibly (derating).
- ► Adapt the current limit values (C0022 and C0023) so that the currents listed in the technical data are not exceeded.

In addition you can set to change over to a lower switching frequency when the heatsink temperature reaches an adjustable limit value. This serves to prevent the drive from being inhibited by the error ”overtemperature” and the motor coasts without torque.

Codes for parameter setting

Code		Possible settings				IMPORTANT	
No.	Name	Lenze	Selection				
C0018	fchop	6				Switching frequency of the inverter ● General rule: the lower the switching frequency the – lower the power loss – higher the noise generation – better the concentricity factor – Observe derating information at high switching frequencies ● The max. output frequency (f_{out}) amounts to: – f_{chop} = 16 kHz ⇒f_{out} = 600 Hz – f_{chop} = 8 kHz ⇒f_{out} = 300 Hz – f_{chop} = 4 kHz ⇒f_{out} = 150 Hz – f_{chop} = 2 kHz ⇒f_{out} = 150 Hz	📖 6.9-1
			0	auto chop	automatic change-over of the switching frequency between 16/8/2 kHz		
			1	2 kHz sin	optimised smooth running		
			2	4 kHz f_top	power-optimised		
			3	8 kHz f_top	power-optimised		
			4	8 kHz sin	noise optimised		
			5	16 kHz sin	noise optimised		
			6	auto 8/2 kHz	noise / power-optimised with automatic change-over to low switching frequency		
C0144 STOP	OH switch	1	0	Switch off	Switch-over is not active	Temperature-dependent switching frequency reduction ● If the heatsink temperature set in C0122 is reached (warning OH4), the controller switches to 2 kHz	
			1	Switch on	Switch-over is active		

Function of automatic switching frequency reduction

C0144 = 0 (no temperature-dependent switching frequency reduction)

If the maximum permissible heatsink temperature (ϑ_{max}) is exceeded when operating with automatic switching frequency reduction, the inverter is inhibited, TRIP ”OH” (overtemperature) is set and the motor coasts without torque.

C0144 = 1 (temperature-dependent switching frequency reduction is active):

► If the heatsink temperature set in C0122 (overtemperature OH4) is reached when operating with automatic switching frequency reduction, the controller automatically reduces the switching frequency to 2 kHz, thus keeping the operation running.

► After the heatsink has cooled down, the controller automatically switches to the set switching frequency again.

6.10 Acceleration, deceleration, braking, stopping

6.10.1 Speed range

Description

The speed range required for the application is set in the codes C0010 and C0011:

► The minimum speed (C0010) corresponds to a speed setpoint selection of 0 %.

► The minimum speed (C0011) corresponds to a speed setpoint selection of 100 %.

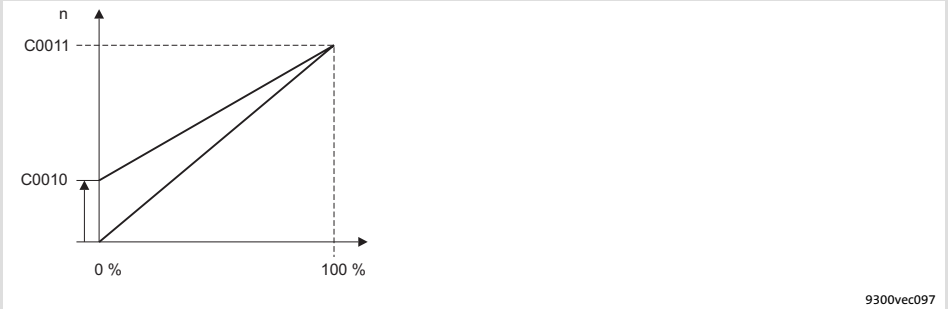

Fig. 6.10-1 Relation between setpoint and minimum and maximum output frequency

Codes for parameter setting

Code		Possible settings				IMPORTANT		
No.	Name	Lenze	Selection					
C0010	N_{min}	0	0	{1 rpm}	36000	● Reference value for the absolute and relative setpoint selection for the acceleration and deceleration times ● C0059 must be set correctly ● Set C0010 < C0011 ● C0010 is only effective in case of analog setpoint selection via AIN1 **Important: For parameter setting via interface, major changes in one step should only be made when the controller is inhibited.**	Minimum speed	📖 6.10-1
C0011	N_{max}	3000	0	{1 rpm}	36000		Maximum speed	

C0010

Features of "minimum speed" (n_{min}):

► C0010 is approached via the acceleration ramp.

► C0010 is only effective with analog setpoint selection via AIN1 (terminal X6/1 and X6/2).

C0011

Features of "maximum output frequency" (n_{max}):

- When selecting fixed setpoints (JOG), C0011 acts as limitation.
- C0011 is an internal scaling variable! Therefore major changes may only be carried out when the controller is inhibited!

Stop!

Set 0011 so that the maximum permissible motor speed is not exceeded.

Otherwise the motor will be destroyed.

Setting tips

The internal speed limits must be observed (p = number of motor pole pairs):

- Switching frequency 16 kHz: n_{max} = 36000/p min^{-1}
- Switching frequency 8 kHz: n_{max} = 36000/2p min^{-1}
- Switching frequency 2/4 kHz: n_{max} = 36000/4p min^{-1}

6.10.2 Setting acceleration times and deceleration times in speed mode

Description

The acceleration and deceleration times determine the controller response time after a setpoint change.

Codes for parameter setting

Code		Possible settings				IMPORTANT	
No.	Name	Lenze	Selection				
C0012	Tir (acc)	5.00	0.00	{0.01 s}	9999.90	Acceleration time T_{ir} of the main setpoint ● Refers to speed change 0 ... C0011	📖 6.10-3
C0013	Tif (dec)	5.00	0.00	{0.01 s}	9999.90	Deceleration time T_{if} of the main setpoint ● Refers to speed change 0 ... C0011	

Adjustment

► The acceleration and deceleration times refer to a speed change from 0 min^{-1} to the max. speed set in C0011.

► Calculate the times T_{ir} and T_{if}, which you can set under C0012 and C0013.

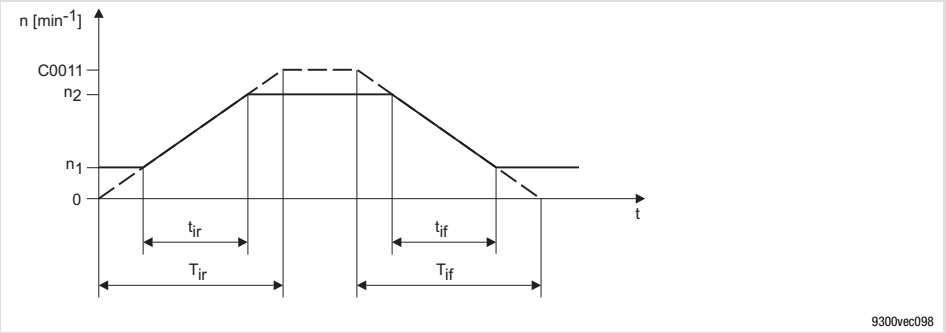

Fig. 6.10-2 Acceleration and deceleration times

$$T_{ir} = t_{ir} \cdot \frac{C0011}{n_2 - n_1}$$

$$T_{if} = t_{if} \cdot \frac{C0011}{n_2 - n_1}$$

t_{ir} and t_{if} are the desired times for the change between n_1 and n_2

Note!

If the acceleration and deceleration times are set too short and under unfavourable operating conditions the controller can be switched off with TRIP OC1 or OC3. In these cases, the acceleration and deceleration times must be set so that the drive can follow the speed profile without I_{max} reaching a drive system.

6.10.3 Quick stop

Description

Quick stop brakes the drive to standstill with the deceleration time set in C0105.

► DC-injection braking (GSB) has priority over quick stop.

Codes for parameter setting

Code		Possible settings				IMPORTANT	
No.	Name	Lenze	Selection				
C0105	QSP Tif	5.00	0.00	{0.01 s}	999.90	Quick stop deceleration time ● The deceleration time refers to a speed variation of C0011 ... 0	📖 8.2-25 📖 8.2-48

Activation

Via digital signal:

► MCTRL-QSP = HIGH.

► Activating signal DCTRL-QSP. The signal can be activated via 3 OR'd inputs:
– Control word CAN-CTRL.B3 from CAN-IN1
– Control word AIF-CTRL.B 3 from AIF-IN
– Control word C0135.B3

Via keyboard of the keypad:

For this the key must be assigned with the quick stop function (C0469 = 2):

– STOP activates quick stop
– RUN restarts the drive

6.10.4 Changing the direction of rotation

Description

In the basic configurations (C0005) the direction of rotation of the motor is reversed in a fail-safe way via the X5/E1 and X5/E2 and the function block R/L/Q. Thus, only the main setpoint is changed.

The reversing time depends on the ramp times set for the main setpoint or quick stop.

When the direction of rotation is changed, the drive brakes along the deceleration ramp (C0013) and accelerates along the acceleration ramp (C0012) into the other direction of rotation.

Direction of rotation with in-phase connection:

Direction of rotation	Signal level at		Notes
	X5/E1	X5/E2	
CCW rotation	LOW	HIGH	
CW rotation	HIGH	LOW	
Quick stop	LOW	LOW	
Unchanged	HIGH	HIGH	• During operation: The direction of rotation results from the signal which was active first. • At mains connection: The controller activates quick stop (QSP).

6.11 Optimising the operating behaviour

6.11.1 Slip compensation

Description

The speed of an asynchronous machine decreases when being loaded. This load-dependent speed drop is called slip. By setting C0021 the slip can be partly compensated.

In the V/f characteristic control mode the slip compensation is only active at operation without feedback (C0025 = 1).

Codes for parameter setting

Code		Possible settings				IMPORTANT	
No.	Name	Lenze	Selection				
C0021	slipcomp	→	-20.00	{0.01 %}	20.00	Slip compensation → Change of C0086, C0087 or C0089 sets C0021 to the calculated rated slip of the motor ● When changing over to the vector control mode, C0021 is set to 0	📖 6.11-1 📖 8.2-25 📖 8.2-48
C0078	Tn slip CTRL	100	1	{1 ms}	6000	Integral-action time of slip controller ● Filter time for slip compensation (C0021) ● Only active with V/f characteristic control	📖 8.2-25

Adjustment

V/f characteristic control

The slip compensation (C0021) is automatically calculated from the rated motor speed (C0087) and the rated motor frequency (C0089). The entered slip constant [%] is the rated slip of the motor in [%] relating to the synchronous speed of the motor.

► Calculating the slip compensation and entering it into C0021:

$$s = \frac{n_{rsyn} - n_r}{n_{rsyn}} \cdot 100\ \%$$

$$n_{rsyn} = \frac{f_r \cdot 60}{p}$$

E	Slip constant (C0021) [%]
n_{rsyn}	Synchronous motor speed [min^{-1}]
n_r	Rated motor speed according to motor nameplate [min^{-1}]
f_r	Rated motor frequency according to motor nameplate [Hz]
p	Number of motor pole pairs (1, 2, 3, ...)

► If required, the slip compensation can be adapted manually:
- If C0021 is set too high, the drive may get unstable.
- With cyclic load impulses (e. g. centrifugal pump) a smooth motor characteristic is achieved by smaller values in C0021 (possibly negative values)
- Parameterise C0078 (filter time for the slip compensation) if you want to change the motor response time to load changes (dynamic ↔ slow).

► The actual speed is output as an analog signal (in [%] of n_{max} (C0011)) to MCTRL-NACT.

Note!

When operating synchronous or reluctance motors, C0021 must be set to 0.

Vector control

Use C0021 to change the influence of the rotor resistance (C0082) proportionally:

► Reduce the value in C0021 at an increasing speed (negative values)

► Increase the value in C0021 at a decreasing speed

Note!

When setting the vector control mode, the slip compensation (C0021) is automatically set to 0.0 %.

► When you switch back to the V/f characteristic control mode, the slip compensation must be re-adapted.

6.11.2 Oscillation damping

Description

Suppressing no-load oscillations in case of:

- ► Drives with different rated power of controller and motor, e. g. when operating with high switching frequency and the power derating involved.
- ► Operation of higher-pole motors.
- ► Operation of three-phase AC drives > 10 kW.

Compensation of resonances in the drive kit:

- ► Certain asynchronous motors may show this behaviour above $^1/_3$ of the rated speed ($^1/_3 \cdot n_n$). This may result in an unstable operation (current and speed variations).

Codes for parameter setting

Code		Possible settings				IMPORTANT	
No.	Name	Lenze	Selection				
C0234	damp value	20	-100	{1 %}	100	Influence of the oscillation damping, function block MCTRL ● Minimising a tendency to oscillation of the drive ● Influences the tendency to oscillation of the drive ● When C0025 >1 and C0006 = 1, C0234 is set to 0	📖 8.2-25 📖 8.2-48
C0235	damping	5	1	{1 ms}	600	Filter time of the oscillation damping, function block MCTRL ● Filter time for the internal signal for oscillation damping	📖 8.2-25 📖 8.2-48
C0236	damp limit	0.2	0.0	{0.1 Hz}	20.0	Limit value of oscillation damping, function block MCTRL ● Limit value for the internal signal of oscillation damping	

Adjustment

The Lenze setting is designed for power-adapted motors.

Usually, the speed oscillations can be reduced by changing the Lenze setting of the codes C0234 oder C0236 by the factor 2 ... 5.

1. Approach the range with speed oscillations.
2. Change the influence of the oscillation damping in C0234 (generally, increase it).
3. Increase the limitation of the oscillation damping in C0236.
4. Change filter time in C0235 in the range of 1 ... 20 ms, if necessary.

► These can be indicators for smooth running:
– Constant motor current characteristic
– Reduction of the mechanical oscillations in the bearing seat

Note!

Restricted effect with vector control

► The oscillation damping has no influence on the drive behaviour at low tendency to oscillation of the speed controller.

► Especially for drives > 55 kW with a tendency to oscillation it may be necessary to deactivate the oscillation damping (C0234 = 0 %).

► For operation with feedback the oscillation damping has no influence.

6.11.3 Boost correction with V/f characteristic control

Description

In the V/f characteristic control mode (C0006 = 5), a constant voltage boost (in [%] von C0090) can be preset in code C0016 at low speeds or motor standstill.

If due to the setting in C0016 no current or a nonuniform current flows, the voltage boost can be further increased via the boost correction to inject a sufficiently high and uniform current into the motor.

If the voltage boost is insufficient, the following drive behaviour occurs:

► The required torque is not achieved at standstill.

► When the load is accelerated from standstill, the current overshoots as the motor had not been magnetised sufficiently before. OC1 can trip.

Note!

If the motor magnetising current is too low, Lenze recommends to operate the controller with sine-wave modulated switching frequency (C0018 = 0, 1, 4, 5 oder 6) only.

Codes for parameter setting

Code		Possible settings				IMPORTANT	
No.	Name	Lenze	Selection				
C0080	Vp field CTRL	0.00	0.00	{0.01 }	0.99	Influence on the motor magnetising current set in C0095 ● Not effective when C0006 = 1 and C0025 > 1 ● Sphere of influence is effective from 0 Hz to the frequency set in C1583	📖 6.6-1 📖 6.11-5
C0095 STOP	Mot Io	→	0.00	{0.01 A}	1000.00	Motor magnetising current → depending on C0086, C0088 and C0091 ● Change of C0086, C0088 and C0091 sets C0095 to the Lenze setting ● Change of C0095 sets C0086 = 0	📖 6.6-1 📖 6.11-5
C1583	fset high	100.00	0.00	{0.01 %}	199.99	**Alterations by Lenze service only!** Adaptation of the motor magnetising current set in C0095 (with V/f characteristic control: influence limit of the boost correction; with vector control: influence limit of the field precontrol) ● The output frequency is set up to which the motor magnetising current set in C0095 is to have an effect. ● C1583 = 100 % ≙ half the rated motor frequency in C0089	📖 6.11-5

Adjustment

Stop!

A longer operation of the motor in standstill may destroy the motor by overheating, especially in case of small motors.

► Connect the thermal contact (NC contact), PTC, or KTY of the motor and activate the motor temperature monitoring of the controller.

► Operate self-ventilated motors with a blower, if required.

Setting voltage boost

1. Set a voltage boost in C0016. (📖 6.8-6)
   – When C0016 = 0 % no boost is possible.
2. For magnetising the motor, consider enough time from controller enable to the start of the speed ramp-function generator.
   – The bigger the motor the longer the time for magnetisation. A motor with the power of 90 kW requires up to 2 s.
   – If the desired continuous current does not flow, correct the boost using the codes C0080, C0095 and C1583.

Carry out a boost correction

3. If required, set the desired motor magnetising current (standstill current) in C0095 which is to be achieved by the boost correction.
   – The value in the Lenze setting has been evaluated by the controller from the entered motor data of the motor nameplate.
   – When C0095 = 0, the boost correction is deactivated.
4. Set the influence of the boost correction in C0080.

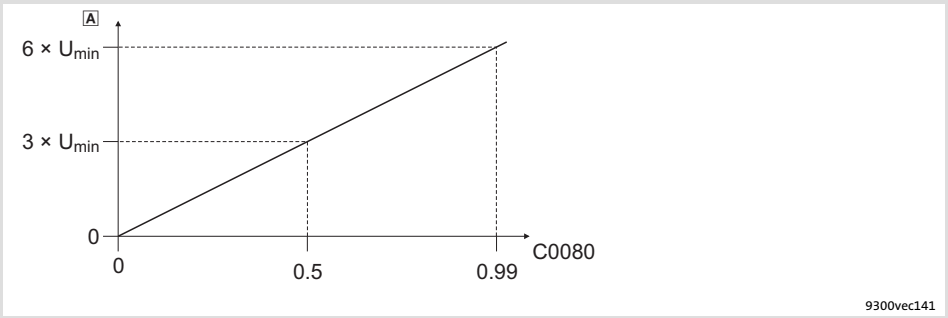

Fig. 6.11-1 Influence of boost correction

A	Maximum height of the correction value when the field frequency is 0
C0080 = 0.99	Maximum correction value. The voltage boost U_{min} achieved by C0016 is increased sixfold.
C0080 = 0	No correction value. The voltage boost U_{min} achieved by C0016 is not increased, the boost correction is deactivated.

Increase the value in C0080 step by step and observe the effect on the current injection with an oscilloscope, if required.

– If the boost correction is to high, this can cause current overshoots when the current injection starts.

5. Set the adaptation of the boost correction in C1583.

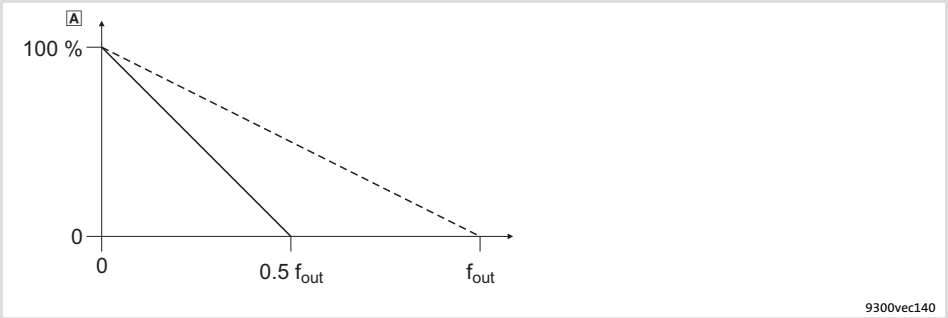

Fig. 6.11-2 Adaptation of boost correction

A	Adaptation of boost correction
———	Characteristic when C1583 = 100 % (Lenze setting). The output frequency corresponds to half the rated motor frequency in C0089.
- - - - -	Characteristic when C1583 = 199.99 %. The output frequency corresponds to the rated motor frequency in C0089.

When C1583 = 0 % the boost correction is deactivated

Enter the output frequency in C1583 until which the boost correction is to have an effect.

– At an output frequency of 0 Hz the boost correction has the influence defined in C0080 and is 100 percent efficient. An increasing output frequency reduces the influence linearly to 0.

Example

A motor connected to a controller has a rated motor voltage of 400 V (C0090 = 400 V). The voltage boost U_{min} is set to 2 % (C0016 = 2 %).

► At a voltage boost of 2 % and a rated motor voltage of 400 V, U_{min} = 8 V.

The voltage boost U_{min} is to be optimised via C0080:

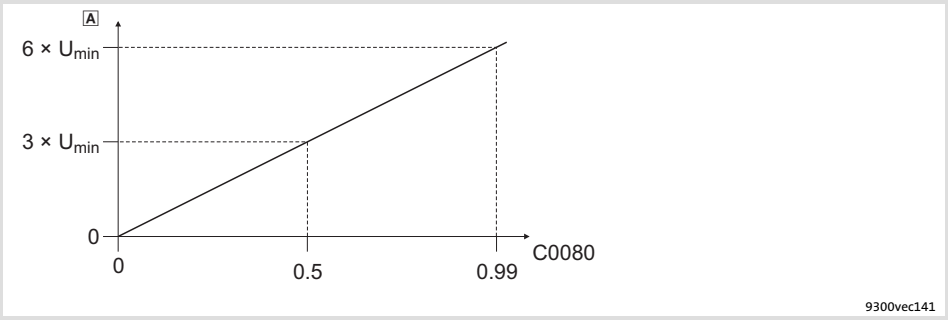

Fig. 6.11-3 Influence of boost correction

A Maximum correction value when the output frequency is 0 Hz

► When C0080 = 0.5, the maximum correction value is:
$3 \times U_{min} = 3 \times 8\ V = 24\ V$

► The maximum voltage boost is:
U_{min} + correction value = 8 V + 24 V = 32 V

6.11.4 Motor magnetising current with vector control

This chapter describes how to optimise the setpoint for the motor magnetising current (C0095) via the codes C0080 and C1583 in case of vector control **without** feedback.

► In case of vector control **with** feedback the setpoint for the motor magnetising current is only determined by C0095. An optimisation is not required. The codes C0080 and C1583 have no effect.

The motor current consists of the exciting and active part. The magnetisation of the motor is determined by the excitation current (magnetising current). To create a torque the motor needs active current.

In the vector control mode (C0006 = 1) a magnetising current is injected into the motor after controller enable. The current level is detected by the controller from the motor data.

If a too low motor magnetising current is injected after controller enable, the following drive behaviour occurs:

► The required torque is not achieved at standstill.

► When a high load is accelerated from standstill, the current overshoots. OC1 can be activated.

► The machine runs irregularly as the motor is underexcited.

Note!

If the motor magnetising current is too low, Lenze recommends to operate the controller with sine-wave modulated switching frequency (C0018 = 0, 1, 4, 5 oder 6) only.

Codes for parameter setting

Code		Possible settings				IMPORTANT	
No.	Name	Lenze	Selection				
C0080	Vp field CTRL	0.00	0.00	{0.01 }	0.99	Influence on the motor magnetising current set in C0095 ● Not effective when C0006 = 1 and C0025 > 1 ● Sphere of influence is effective from 0 Hz to the frequency set in C1583	📖 6.6-1 📖 6.11-5
C0095 STOP	Mot Io	→	0.00	{0.01 A}	1000.00	Motor magnetising current → depending on C0086, C0088 and C0091 ● Change of C0086, C0088 and C0091 sets C0095 to the Lenze setting ● Change of C0095 sets C0086 = 0	📖 6.6-1 📖 6.11-5
C1583	fset high	100.00	0.00	{0.01 %}	199.99	**Alterations by Lenze service only!** Adaptation of the motor magnetising current set in C0095 (with V/f characteristic control: influence limit of the boost correction; with vector control: influence limit of the field precontrol) ● The output frequency is set up to which the motor magnetising current set in C0095 is to have an effect. ● C1583 = 100 % ≙ half the rated motor frequency in C0089	📖 6.11-5

Adjustment

Stop!

A longer operation of the motor in standstill may destroy the motor by overheating, especially in case of small motors.

► Connect the thermal contact (NC contact), PTC, or KTY of the motor and activate the motor temperature monitoring of the controller.

► Operate self-ventilated motors with a blower, if required.

Basic setting

1. Enter the motor data of the motor nameplate and execute the motor identification. (📖 6.6-14)
2. For magnetising the motor, consider enough time. The motor is being magnetised between controller enable and motor start.

   A delayed start of the motor can be achieved using e.g. the quick stop function:

   – Activate quick stop. Enable the controller and wait until the motor is magnetised sufficiently. Deactivate quick stop for the motor to start.

   The bigger the motor the longer the time for magnetisation. A motor with the power of 90 kW requires up to 2 s.

   If the desired continuous current does not flow, the magnetisation of the motor can be optimised using the codes C0080, C0095 and C1583.

Optimisation

3. If required, select a setpoint for the motor magnetising current in C0095.
   – The value in the Lenze setting has been evaluated by the controller from the entered motor data of the motor nameplate.
4. The influence, the setpoint of the motor magnetising current is to have, can be set in C0080.
   – A P controller which increases or reduces the setpoint can be parameterised via C0080.
   – Increase the value in C0080 step by step and observe the effect on the current injection with an oscilloscope, if required.
   – When C0080 = 0 the P controller is deactivated. No setpoint is selected for the motor magnetising current.
5. Set the adaptation of the setpoint for the motor magnetising current in C1583.

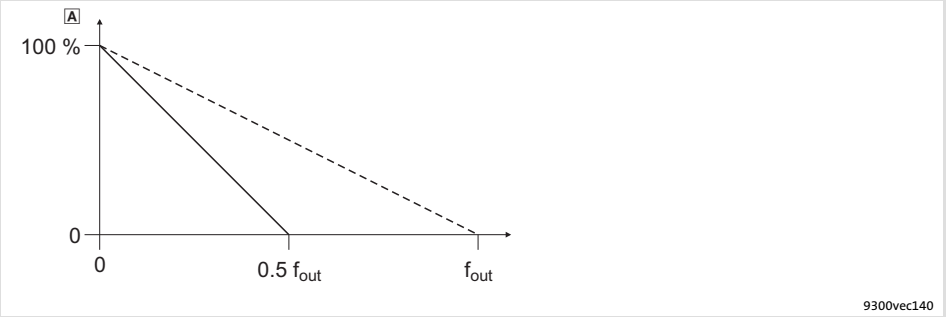

Fig. 6.11-4 Adaptation of the setpoint for the motor magnetising current

A Adaptation of the setpoint
——— Characteristic when C1583 = 100 % (Lenze setting). The output frequency corresponds to half the rated motor frequency in C0089.
- - - - - Characteristic when C1583 = 199.99 %. The output frequency corresponds to the rated motor frequency in C0089.
When C1583 = 0 % the adaptation is deactivated. No setpoint is selected for the motor magnetising current.

Select the output frequency in C1583, up to which the setpoint of the motor magnetising current is to have an effect.
– At an output frequency of 0 Hz the setpoint has the influence defined in C0080 and is 100 percent efficient. An increasing output frequency reduces the influence linearly to 0.

7 Parameter setting

Contents

7.1 Important notes 7.1-1
7.2 Parameter setting with the XT EMZ9371BC keypad 7.2-1
7.2.1 General data and operating conditions 7.2-1
7.2.2 Installation and commissioning 7.2-2
7.2.3 Display elements and function keys 7.2-2
7.2.4 Changing and saving parameters 7.2-4
7.2.5 Loading a parameter set 7.2-6
7.2.6 Transferring parameters to other standard devices 7.2-7
7.2.7 Activating password protection 7.2-9
7.2.8 Diagnostics 7.2-10
7.2.9 Menu structure 7.2-11

7.1 Important notes

Adapting the controller functions to the application

The controller functions can be adapted to your applications by means of parameterisation. You can either parameterise via keypad, PC or via the parameter channel of a bus system.

The function library contains a detailed description of the functions, the signal flow diagrams contain all configurable signals.

Parameters and codes

The parameters for the functions are stored in numbered codes:

► Codes are marked in the text with a ”C” (e.g. C0002).

► The code table provides a quick overview of all codes. The codes are sorted according to their numbers and can be used as reference. (📖 8.5-1)

Parameter setting via keypad

A quick parameter setting is provided by the keypad XT. Moreover, it serves as status display, error diagnosis and transfer of parameters to other drive controllers.

	Keypad XT EMZ9371BC
Can be used with	8200 vector, 8200 motec, starttec, Drive PLC, 9300 vector, 9300 servo
Operator buttons	8
Plain text display	yes
Menu structure	yes
Configurable menu (“user menu”)	yes
Predefined basic configurations	yes
Non-volatile memory for parameter transfer	yes
Password protection	yes
Diagnosis terminal	Keypad XT in handheld design, IP 20 (E82ZBBXC)
Installation in control cabinet	no
Type of protection	IP 20
Detailed description	📖 7.2-1

Parameter setting via PC

You need the parameter setting / operating software »Global Drive Control« (GDC) or »Global Drive Control easy« (GDC easy) and an interface for communication:

► Interface for system bus (CAN) (preset in GDC):
– PC system bus adapter

► Serial interface for LECOM:
– Communication module LECOM-A/B (RS232/RS485) EMF2102IB-V001

The parameter setting /operating software of the Global Drive Control family are easy-to-understand and tools for the operation, parameter setting and diagnostics or Lenze drive controllers.

	GDC easy ESP-GDC2-E	**GDC ESP-GDC2**
Supply	Free download from the internet at www.lenze.com	Program package must be charged for
Operation in interactive mode	yes	yes
Comprehensive help functions	yes	yes
Menu ”Short setup”	yes	yes
Monitor windows for displaying operating parameters and for diagnostic purposes	yes	yes
Saving and printing of parameter settings as code list	yes	yes
Loading of parameter files from the controller to the PC	yes	yes
Storing of parameter files from the PC in the controller	yes	yes
Function block editor	no	yes
Technology functions for 9300 Servo	no	yes
Oscilloscope function for 9300 Servo and 9300 vector	no	yes
Detailed description	Online help of the program	Online help of the program

Parameter setting via bus system

Detailed information can be found in the documentation of the corresponding bus system.

7.2 Parameter setting with the XT EMZ9371BC keypad

7.2.1 General data and operating conditions

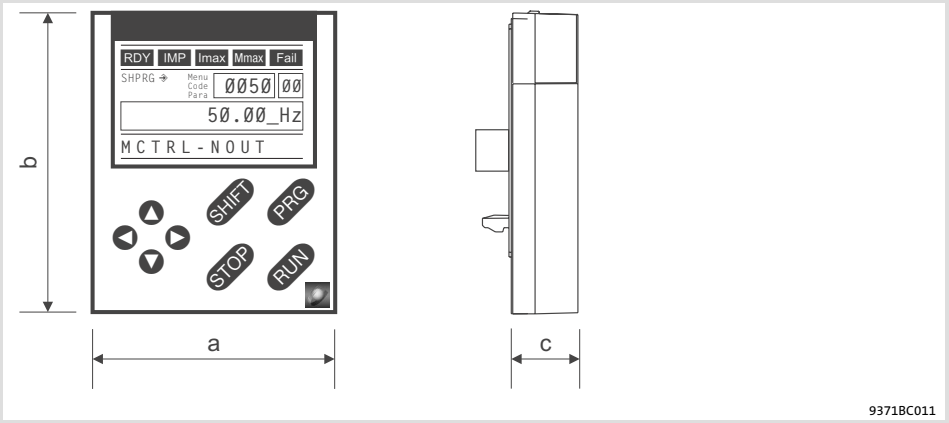

Feature		Values
Dimensions		
Width	a	60 mm
Height	b	73.5 mm
Depth	c	15 mm

Environmental conditions		
Climate		
Storage	IEC/EN 60721-3-1	1K3 (-25 ... +60 °C)
Transport	IEC/EN 60721-3-2	2K3 (-25 ... +70 °C)
Operation	IEC/EN 60721-3-3	3K3 (-10 ... +60 °C)

Enclosure	IP 20

7.2.2 Installation and commissioning

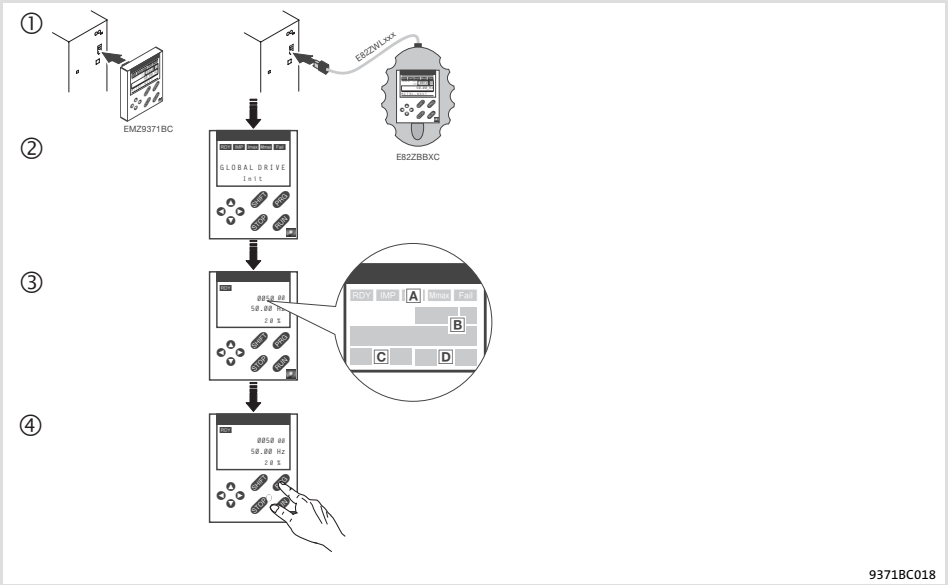

Fig. 7.2-1 Installation and commissioning of XT EMZ9371BC keypad or E82ZBBXC diagnosis terminal

① Connect keypad to the AIF interface on the front of the standard device.
The keypad can be connected/disconnected during operation.

② As soon as the keypad is supplied with voltage, it carries out a short self-test.

③ The operation level indicates when the keypad is ready for operation:

- A Current state of the standard device
- B Memory location 1 of the user menu (C0517):
  Code number, subcode number, and current value
- C Active fault message or additional status message
- D Actual value in % of the status display defined in C0004

④ PRG must be pressed to leave the operation level

7.2.3 Display elements and function keys

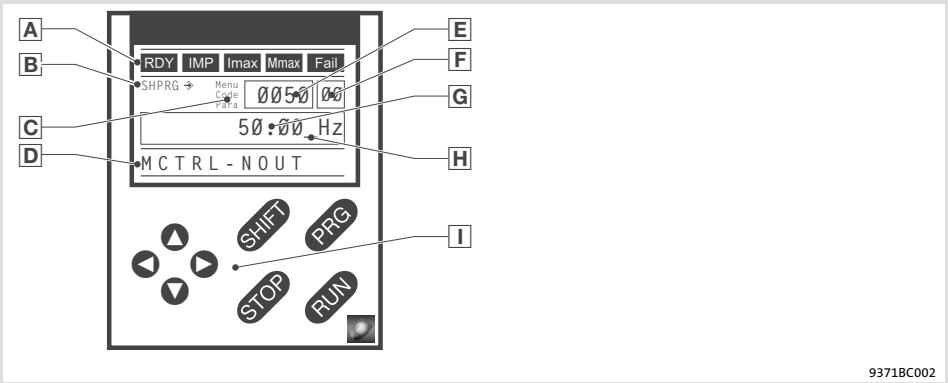

Fig. 7.2-2 Display elements and function keys of the XT EMZ9371BC keypad

Displays

A	Status displays of standard device		
	Display	**Meaning**	**Explanation**
	RDY	Ready for operation	
	IMP	Pulse inhibit is active	Power outputs are inhibited
	Imax	The set current limit is exceeded in motor or generator mode	

	Mmax	Speed controller 1 in the limitation	Drive is torque-controlled (Only active for operation with standard devices of the 9300 series)
	Fail	Active fault	
B	**Acceptance of the parameters**		
	Display	**Meaning**	**Explanation**
	→	Parameter is accepted immediately	Standard device operates immediately with the new parameter value
	SHPRG →	Parameter must be acknowledged with SHIFT PRG	Standard device operates with the new parameter value after being acknowledged
	SHPRG	Parameter must be acknowledged in case of controller inhibit SHIFT PRG	Standard device operates with the new parameter value after the controller is enabled again
	None	Display parameter	Change is not possible
C	**Active level**		
	Display	**Meaning**	**Explanation**
	Menu	Menu level is active	Select main menu and submenus
	Code	Code level is active	Select codes and subcodes
	Para	Parameter level is active	Change parameters in the codes or subcodes
	None	Operating level is active	Display operating parameters
D	**Short text**		
	Display	**Meaning**	**Explanation**
	alphanumeric al	Contents of the menus, meaning of the codes and parameters	
		In the operating level display of C0004 in % and the active fault	
E	**Number**		
	Active level	**Meaning**	**Explanation**
	Menu level	Menu number	Display is only active for operation with standard devices of the 8200 vector or 8200 motec series
	Code level	Four-digit code number	
F	**Number**		
	Active level	**Meaning**	**Explanation**
	Menu level	Submenu number	Display is only active for operation with standard devices of the 8200 vector or 8200 motec series
	Code level	Two-digit subcode number	
G	**Parameter value**		
		Parameter value with unit	
H	**Cursor**		
		In the parameter level, the digit above the cursor can be directly changed	
I	**Function keys**		
		For description see the following table	

Function keys

Note!

Shortcuts with SHIFT:

Press and hold SHIFT, then press the second key in addition.

Key	Function			
	Menu level	Code level	Parameter level	Operating level
PRG		Change to the parameter level	Change to the operating level	Change to the code level
SHIFT PRG	Go to the "Short setup" menu and load predefined configurations [1]		Accept parameters when SHPRG ⇒ or SHPRG is displayed	
▲ ▼	Change between menu items	Change of code number	Change of digit via cursor	
SHIFT ▲ SHIFT ▼	Quick change between menu items	Quick change of code number	Quick change of digit via cursor	
▶	Change between main menu, submenu and code level		Cursor to the right	
◀			Cursor to the left	
RUN	Deactivate the function of the key STOP, the LED in the key goes off			
STOP	Inhibit the controller, the LED in the key is lit.			
	Reset fault (TRIP-Reset):	1. Remove the cause of malfunction 2. Press STOP 3. Press RUN		

[1] Only active for operation with standard devices of the 8200 vector or 8200 motec series

7.2.4 Changing and saving parameters

Note!

Your settings have an effect on the current parameters in the main memory. You must save your settings in a parameter set so that they are not lost when the mains are connected.

If you only need one parameter set, save your settings as parameter set 1, since parameter set 1 is loaded automatically after mains connection.

Step			Key sequence	Action
1.	Select the menu		▲ ▼ ▶ ◀	Use the arrow keys to select the desired menu
2.	Change to the code level		▶	Display of the first code in the menu
3.	Select code or subcode		▼ ▲	Display of the current parameter value
4.	Change to the parameter level		PRG	
5.	When SHPRG is displayed, inhibit the controller		STOP [1]	The drive coasts
6.	Change parameter			
		A	▶ ◀	Move cursor below the digit to be changed
		B	▼ ▲	Change of digit

Step			Key sequence	Action
			SHIFT ▼ SHIFT ▲	Quick change of digit
7.	Accept the changed parameter			
	Display of SHPRG or SHPRG ⇨		SHIFT PRG	Confirm change to accept the parameter Display ”OK”
	Display ⇨		-	The parameter has been accepted immediately
8.	Enable the controller, if required		RUN [1]	The drive runs again
9.	Change to the code level			
		A	PRG	Display of the operating level
		B	PRG	Display of the code with changed parameter
10.	Change further parameters			Restart the ”loop” with step 1. or 3.
11.	Save changed parameters			
		A	▲ ▼ ▶ ◀	Select the code C0003 ”PAR SAVE” in the menu ”Load/Store”
		B	PRG	Change to the parameter level Display ”0” and ”READY”
	Select the parameter set in which the parameters are to be saved permanently	C	▲	Save as parameter set 1: ⇨ Set ”1” ”Save PS1”
				Save as parameter set 2: ⇨ Set ”2” ”Save PS2”
				Save as parameter set 3: ⇨ Set ”3” ”Save PS3”
				Save as parameter set 4: ⇨ Set ”4” ”Save PS4”
		D	SHIFT PRG	When ”OK” is displayed, the settings are permanently saved in the selected parameter set.
12.	Change to the code level			
		A	PRG	Display of the operating level
		B	PRG	Display of C0003 ”PAR SAVE”
13.	Set parameters for another parameter set			Restart the ”loop” with step 1. or 3.

[1] The function of the STOP key can be programmed:
C0469 = 1: Controller inhibit
C0469 = 2: Quick stop (Lenze setting)

7.2.5 Loading a parameter set

The keypad serves to load a saved parameter set into the main memory when the controller is inhibited. After the controller is enabled, it operates with the new parameters.

Danger!

- ► When a new parameter set is loaded, the controller is reinitialised and acts as if it had been connected to the mains:
  - System configurations and terminal assignments can be changed. Make sure that your wiring and drive configuration comply with the settings of the parameter set.
- ► Only use terminal X5/28 as source for the controller inhibit! Otherwise the drive may start in an uncontrolled way when switching over to another parameter set.

Note!

- ► After switching on the supply voltage, the controller always loads parameter set 1 into the main memory.
- ► It is also possible to load other parameter sets into the main memory via the digital inputs or bus commands.

Step			Key sequence	Action
1.	Inhibit controller			Terminal X5/28 = LOW
2.	Load the saved parameter set into the main memory			
		A	▲ ▼ ► ◄	Select the code C0002 ”PAR LOAD” in the menu ”Load/Store”
		B	PRG	Change to the parameter level The active parameter set is displayed, e. g. display ”0” and ”Load Default” If you want to restore the delivery status, proceed with D
	Select the parameter set to be loaded	C	▲	Load parameter set 1: ⇨ Set ”1” ”Load PS1”
				Load parameter set 2: ⇨ Set ”2” ”Load PS2”
				Load parameter set 3: ⇨ Set ”3” ”Load PS3”
				Load parameter set 4: ⇨ Set ”4” ”Load PS4”
		D	SHIFT PRG	”RDY” goes off. The parameter set is loaded completely into the main memory if ”RDY” is displayed again.
3.	Change to the code level			
		A	PRG	Display of the operating level
		B	PRG	Display of C0002 ”PAR LOAD”
4.	Enable controller			Terminal X5/28 = HIGH The drive is running with the settings of the loaded parameter set

7.2.6 Transferring parameters to other standard devices

Parameter settings can be easily copied from one standard device to another by using the keypad.

For this purpose use the ”Load/Store” menu

Danger!

During the parameter transfer from the keypad to the standard device the control terminals can adopt undefined states!

Therefore the plugs X5 and X6 must be disconnected from the standard device before the transfer takes place. This ensures that the controller is inhibited and all control terminals have the defined state ”LOW”.

Copying parameter sets from the standard device into the keypad

Note!

After copying the parameter sets into the XT keypad (C0003 = 11), always the parameter set that was loaded last via C0002 is activated.

Like this the current parameters also remain active after copying:

► Save the current parameters in the parameter set before copying and load this parameter set in the controller via C0002.

Step			Key sequence	Action
1.	Connect the keypad to standard device 1			
2.	Inhibit controller			Terminal X5/28 = LOW The drive coasts.
3.	Select C0003 in the ”Load/Store” menu		▲ ▼ ► ◄	Select code C0003 ”PAR SAVE” in the ”Load/Store” menu using the arrow keys.
4.	Change to the parameter level		PRG	Display ”0” and ”READY”
5.	Copy all parameter set into the keypad			The settings saved in the keypad are overwritten.
			▲	Set ”11” ”Save extern”
6.	Start copying		SHIFT PRG	The ”RDY” status display goes off. As parameter value ”BUSY” is displayed. If ”BUSY” goes off after approx. one minute, all parameter sets were copied into the keypad. The ”RDY” status display is lit.
7.	Change to the code level			
		A	PRG	Display of the operating level
		B	PRG	Display C0003 and ”PAR SAVE”
8.	Enable controller			Terminal X5/28 = HIGH
9.	Remove keypad from standard device 1			

Copying parameter sets fom keypad into the standard device

Step		Key sequence	Action
1.	Connect the keypad to standard device 2		
2.	Inhibit controller		Terminal X5/28 = LOW The ”IMP” status display is it. The drive coasts
3.	Pull the plugs X5 and X6		All control terminals have the defined ”LOW” status.
4.	Select C0002 in the ”Load/Store” menu	▲ ▼ ▶ ◀	Select code C0002 ”PAR LOAD” in the ”Load/Store” menu using the arrow keys.
5.	Change to the parameter level	PRG	The active parameter set is shown, e. g. display ”0” and ”Load Default”
6.	Select the correct copy function		The settings saved in the standard device are overwritten.
	● Copy all parameter sets available into the EEPROM of the standard device and save them permanently.		● The parameter set that was active before copying is overwritten. ● The parameters are not yet active after copying. Select parameter set and load it in the main memory. 📖 7.2-6
		▲	Set ”20” ”ext -> EEPROM”
	● Copy individual parameter sets into the main memory of the standard device.		
		▲	Copy parameter set 1 into the main memory: Set ⇨ ”11” ”Load ext PS1”
			Copy parameter set 2 into the main memory: Set ⇨ ”12” ”Load ext PS2”
			Copy parameter set 3 into the main memory: Set ⇨ ”13” ”Load ext PS3”
			Copy parameter set 4 into the main memory: Set ⇨ ”14” ”Load ext PS4”
7.	Start copying	SHIFT PRG	The ”RDY” status display goes off. As parameter value ”BUSY” is displayed. If ”BUSY” goes off, the parameter sets selected were copied into the standard device. The ”RDY” status display is lit.
8.	Change to the code level		
	A	PRG	Display of the operating level
	B	PRG	Display C0002 and ”PAR LOAD”
9.	● If the function ”Copy all parameter sets into the EEPROM” (C0002 = 20) is selected, they might have to be loaded in the main memory manually. ● If the function ”Copy individual parameter sets into the main memory” (C0002 = 1x) is selected, they might have to be saved permanently in the EEPROM manually.	▲ ▼ ▶ ◀	Select code C0003 ”PAR SAVE” in the ”Load/Store” menu using the arrow keys and store the contents of the main memory permanently.
10.	Plug in plugs X5 and X6		
11.	Enable controller		Terminal X5/28 = HIGH The drive is running with the new settings.

7.2.7 Activating password protection

Note!

- ► If the password protection is activated (C0094 = 1 ... 9999), you only have free access to the user menu.
- ► To access the other menus, you must enter the password. By this, the password protection is annulled until you enter a new password.
- ► Please observe that the password-protected parameters can be overwritten as well when transferring the parameter sets to other standard devices. The password is not transferred.
- ► Do not forget your password! If you have forgotten your password, it can only be reset via a PC or a bus system!

Activate password protection

Step			Key sequence	Action
1.	Select the ”USER menu”		▲ ▼ ► ◄	Change to the user menu using the arrow keys
2.	Change to the code level		►	Display of code C0051 ”MCTRL-NACT”
3.	Select C0094		▲	Display of code C0094 ”Password”
4.	Change to the parameter level		PRG	Display ”0” = no password protection
5.	Set password			
		A	▲	Select password (1 ... 9999)
		B	SHIFT PRG	Confirm password
6.	Change to the code level			
		A	PRG	Display of the operating level
		B	PRG	Display of C0094 and ”Password”
7.	Change to the ”USER menu”		◄ ◄ ▼	

The password protection is active now.
You can only quit the user menu if you re-enter the password and confirm it with SHIFT PRG.

Remove password protection

Step			Key sequence	Action
1.	Change to the code level in the user menu		►	
2.	Select C0094		▲	Display of code C0094 ”Password”
3.	Change to the parameter level		PRG	Display ”9999” = password protection is active
4.	Enter password			
		A	▼	Set valid password
		B	SHIFT PRG	Confirm The password protection is deactivated by entering the password once again.
5.	Change to the code level			
		A	PRG	Display of the operating level
		B	PRG	Display of C0094 and ”Password”

The password protection is deactivated now. All menus can be freely accessed again.

7.2.8 Diagnostics

In the ”Diagnostic” menu the two submenus ”Actual info” and ”History” contain all codes for

► monitoring the drive

► fault/error diagnosis

In the operating level, more status messages are displayed. If several status messages are active, the message with the highest priority is displayed.

Priority	Display	Meaning	
1	GLOBAL DRIVE INIT	Initialisation or communication error between keypad and controller	
2	XXX - TRIP	Active TRIP (contents of C0168/1)	
3	XXX - MESSAGE	Active message (contents of C0168/1)	
4	Special device states:		
		Switch-on inhibit	
5	Source for controller inhibit (the value of C0004 is displayed simultaneously):		
	STP1	9300 servo:	Terminal X5/28
		ECSxS/P/M/A:	Terminal X6/SI1
	STP3	Operating module or LECOM A/B/LI	
	STP4	INTERBUS or PROFIBUS-DP	
	STP5	9300 servo, ECSxA/E:	System bus (CAN)
		ECSxS/P/M:	MotionBus (CAN)
	STP6	C0040	
6	Source for quick stop (QSP):		
	QSP-term-Ext	The MCTRL-QSP input of the MCTRL function block is on HIGH signal.	
	QSP-C0135	Operating module or LECOM A/B/LI	
	QSP-AIF	INTERBUS or PROFIBUS-DP	
	QSP-CAN	9300 servo, ECSxA:	System bus (CAN)
		ECSxS/P/M:	MotionBus (CAN)
7	XXX - WARNING	Active warning (contents of C0168/1)	
8	xxxx	Value below C0004	

7.2.9 Menu structure

For simple, user-friendly operation, the codes are clearly arranged in function-related menus:

Main menu	Submenus	Description
Display	Display	
User-Menu		**Codes defined in C0517**
Code list		**All available codes**
	ALL	All available codes listed in ascending order (C0001 ... C7999)
	PS 1	Codes in parameter set 1 (C0001 ... C1999)
	PS 2	Codes in parameter set 2 (C2001 ... C3999)
	PS 3	Codes in parameter set 3 (C4001 ... C5999)
	PS 4	Codes in parameter set 4 (C6001 ... C7999)
Load/Store		**Parameter set management** Parameter set transfer, restore delivery status
Diagnostic		**Diagnostic**
	Actual info	Display codes to monitor the drive
	History	Fault analysis with history buffer
Short setup		**Quick configuration of predefined applications** **Configuration of the user menu** The predefined applications depend on the type of the standard device (frequency inverter, servo inverter, position controller, ...)
Main FB		**Configuration of the main function blocks**
	NSET	Setpoint processing
	NSET-JOG	Fixed setpoints
	NSET-RAMP1	Ramp function generator
	MCTRL	Motor control
	DFSET	Digital frequency processing
	DCTRL	Internal control
Terminal I/O		**Connection of inputs and outputs with internal signals**
	AIN1 X6.1/2	Analog input 1
	AIN2 X6.3/4	Analog input 2
	AOUT1 X6.62	Analog output 1
	AOUT2 X6.63	Analog output 2
	DIGIN	Digital inputs
	DIGOUT	Digital outputs
	DFIN	Digital frequency input
	DFOUT	Digital frequency output
	State bus	State bus (not with 9300 frequency inverter)
Controller		**Configuration of internal control parameters**
	Speed	Speed controller
	Current	Current controller or torque controller
	Phase	Phase controller (not with 9300 frequency inverter)
Motor/Feedb.		**Input of motor data, configuration of speed feedback**
	Motor adj	Motor data
	Feedback	Configuration of feedback systems
Monitoring		**Configuration of monitoring functions**

Main menu	Submenus	Description
Display	**Display**	
LECOM/AIF		**Configuration of operation with communication modules**
	LECOM A/B	Serial interface
	AIF interface	Process data
	Status word	Display of status words
System bus		**Configuration of system bus (CAN)**
	Management	CAN communication parameters
	CAN-IN1	CAN object 1
	CAN-OUT1	
	CAN-IN2	CAN object 2
	CAN-OUT2	
	CAN-IN3	CAN object 3
	CAN-OUT3	
	Status word	Display of status words
	FDO	Free digital outputs
	Diagnostic	CAN diagnostic
FB config		**Configuration of function blocks**
Func blocks		**Parameterisation of function blocks** The submenus contain all available function blocks
FCODE		**Configuration of free codes**
Identify		**Identification**
	Drive	Software version of standard device
	Op Keypad	Software version of keypad

8 Configuration

Contents

8.1 Important notes 8.1-1
8.2 Function blocks 8.2-1
8.2.1 Diameter calculator (DCALC) 8.2-1
8.2.2 Master frequency input (DFIN) 8.2-5
8.2.3 Master frequency output (DFOUT) 8.2-8
8.2.4 Master frequency ramp-function generator (DFRFG) 8.2-13
8.2.5 Master frequency processing (DFSET) 8.2-18
8.2.6 Internal motor control with V/f characteristic control (MCTRL1) 8.2-25
8.2.7 Internal motor control with vector control (MCTRL2) 8.2-48
8.3 Monitoring 8.3-1
8.3.1 Fault responses 8.3-1
8.3.2 Monitoring times for process data input objects 8.3-2
8.3.3 Maximum speed 8.3-3
8.3.4 Motor 8.3-3
8.3.5 Controller current load (I x t monitoring) 8.3-4
8.3.6 Motor temperature 8.3-5
8.3.7 Current load of motor (I^2 x t monitoring: OC6, OC8) 8.3-6
8.3.8 Heatsink temperature 8.3-7
8.3.9 DC-bus voltage 8.3-8
8.3.10 External error (EEr) 8.3-8
8.4 Overview of monitoring functions 8.41
8.5 Code table 8.5-1
8.6 Selection lists 8.6-1
8.6.1 Selection list 1: Analog output signals 8.6-1
8.6.2 Selection list 2: Digital output signals 8.6-3
8.6.3 Selection list 3: Angle signals 8.6-6
8.6.4 Selection list 4: Speed signals 8.6-6
8.6.5 Selection list 5: Function blocks 8.6-7
8.7 Table of attributes 8.7-1

8.1 Important notes

The ”Configuration” chapter consists of two parts.

System Manual

The ”Configuration” chapter in the System Manual contains the following:

- ► Monitoring
- ► Monitoring functions
- ► Description of the following function blocks:
  - – Diameter calculator (DCALC)
  - – Digital frequency input (DFIN)
  - – Digital frequency output (DFOUT)
  - – Digital frequency ramp function generator (DFRFG)
  - – Digital frequency processing (DFSET)
  - – Internal motor control with V/f characteristic control (MCTRL1)
  - – Internal motor control with vector control (MCTRL2)
- ► Code table
- ► Selection lists
- ► Table of attributes

System Manual (extension)

The ”Configuration” chapter in the System Manual (extension) contains the following:

- ► Notes on the configuration with Global Drive Control
- ► Description of the basic configuration
- ► Use of function blocks
- ► Description of the other function blocks for the 9300 vector frequency inverter

8.2 Function blocks

8.2.1 Diameter calculator (DCALC)

Description

The function block calculates the current reel diameter in winding drives.

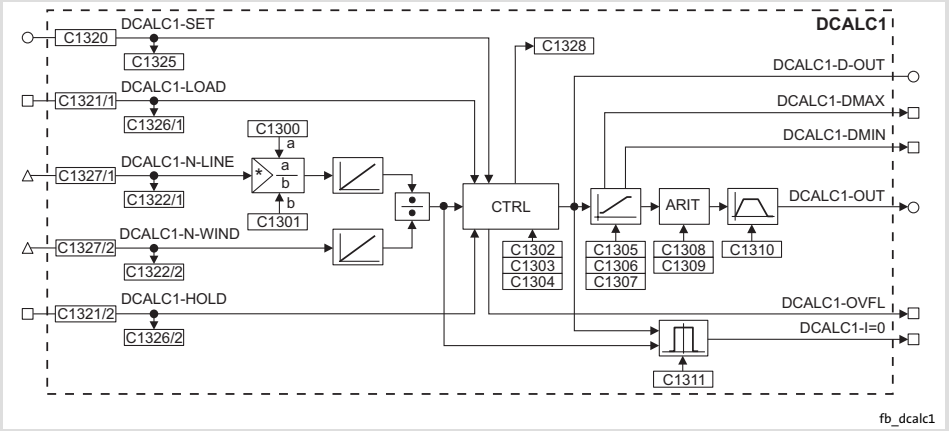

Fig. 8.2-1 Diameter calculator (DCALC1)

Codes for parameter setting

Code		Possible settings				IMPORTANT	
No.	Name	Lenze	Selection				
C1300 STOP	N-motor/ Dmax	300	-32767	{1 rpm}	32767	Motor speed at D_{max}, function block DCALC1 ● Nominal speed of the winding drive	📖 8.2-1
C1301 STOP	N-line max	3000	1	{1 rpm}	32767	Maximum line speed, function block DCALC1 ● Nominal speed of the line drive	
C1302	calc cycle	0.1	0.1	{0.1 rev}	100.0	Calculation cycle, function block DCALC1	📖 8.2-1
C1303	time const	0.10	0.01	{0.01 s}	50.00	Filter time constant, function block DCALC1	
C1304 STOP	Dmax	500	1	{1 mm}	10000	Maximum diameter, function block DCALC1 ● Nominal winding diameter	📖 8.2-1
C1305	lower D-limit	50	1	{1 mm}	10000	Lower diameter limit, function block DCALC1 ● Minimum winding diameter	
C1306	upper D-limit	500	1	{1 mm}	10000	Upper diameter limit, function block DCALC1 ● Maximum winding diameter	
C1307	hyst D-limit	1.00	0.00	{0.01 %}	100.0	Hysteresis - diameter limitation, function block DCALC1 ● Hysteresis for D_{min} /D_{max} output	
C1308 STOP	arit function	1	0	DCALC1-OUT=D	DCALC1-OUT = diameter	Selection of the arithmetic function, function block DCALC1	📖 8.2-1
			1	DCALC1-OUT=1/D	DCALC1-OUT = 1/diameter		

Code		Possible settings				IMPORTANT	
No.	Name	Lenze	Selection				
C1309 STOP	Dmin	50	1	{1 mm}	10000	Minimum diameter, function block DCALC1	📖 8.2-1
C1310	DCALC1-Titime	0.000	0.000	{0.001 s}	999.900	Acceleration and deceleration time, function block DCALC1	
C1311	window D-calc	1.00	0.00	{0.01 %}	100.00	Window - diameter calculation, function block DCALC1 ● Window setting for permissible diameter deviation	
C1320 STOP	CFG: SET	1000	FIXED0%		📖 Selection list 1	Configuration of analog input signal, function block DCALC1 ● The signal is scaled to the value in C1304 (100 % ≙ C1304)	📖 8.2-1
C1321 STOP					📖 Selection list 2	Configuration of digital input signals, function block DCALC1	
1	CFG: LOAD	1000	FIXED0			● HIGH: initial value at DCALC1-SET is accepted ● DCALC1-LOAD has a higher priority than DCALC1-HOLD	
2	CFG: HOLD	1000	FIXED0			● HIGH = holds the diameter value reached and resets the integrators.	
C1322			-36000	{1 rpm}	36000	Function block DCALC1 ● Display of the signals linked in C1327	📖 8.2-1
1	DIS: N-Line						
2	DIS: N-WIND						
C1325	DIS: SET		-199,99	{0.01 %}	199,99	Function block DCALC1 ● Display of the signal linked in C1320	
C1326			0		1	Function block DCALC1 ● Display of the signals linked in C1321	
1	DIS: LOAD						
2	DIS: HOLD						
C1327 STOP					📖 Selection list 3	Configuration of input signals, function block DCALC1	📖 8.2-1
1	CFG: N-Line	1000	FIXED0INC			● Speed signal of the line drive	
2	CFG: N-WIND	1000	FIXED0INC			● Speed signal of the winding drive	
C1328	DIS: D-ACT		-200	{1 mm}	200	Function block DCALC1 ● Display of the current diameter	

Setting the initial value

The signal at DCALC1-Set is set as initial value.

► With DCALC1-LOAD = 1 the initial value is accepted.

► The initial value is accepted unfiltered.

Calculating the diameter

By division of the speed signals at DCALC1-N-LINE and DCALC1-N-WIND, the current diameter is calculated.

- ► The signal at DCALC1-N-LINE has to correspond to the circumferential speed of the reel.
- ► The signal at DCALC1-N-WIND has to be proportional to the reel speed.
- ► You have to adapt the signal at DCALC1-N-LINE in C1300 and C1301, so that the value calculated corresponds to the actual diameter. The nominal reel diameter d_{max} is entered in C1304.
  - – For operation with the nominal reel diameter d_{max} you have to enter the value at input DCALC1-N-WIND in C1300 and the value at input DCALC1-N-LINE in C1301.
- ► The input signals are integrated cyclically. In C1302 you alter the integration interval (calculation cycle):

  Great value in C1302 ⇒ high resolution

  Low value in C1302 ⇒ low resolution
- ► If the integrator overflows, DCALC1-OVFL is set to HIGH. The integrator is reset internally and starts again with the calculation of the last correct value.
- ► A first-order low pass filters the values calculated. The filter time constant is set via C1303.

Displaying the diameter

In C1328 the current diameter is displayed.

- ► For the conversion of the scaled calculated value to the absolute value [mm], the reference diameter d_{max} has to be entered via C1304.
- ► At DCALC1-D-OUT the current diameter is output. The signal is scaled to the value in C1304.

Maintaining/saving the current value

With DCALC1-HOLD = HIGH the last diameter value calculated is maintained and the integrators are reset.

- ► When the controller is switched off, the current diameter value is saved. When it is switched on, the last value saved is loaded.

Setting/displaying the diameter

In C1305 the minimum diameter (d_{min}) in [mm] is entered. d_{min} is reached when DCALC1-DMIN switches to HIGH.

In C1306 the maximum diameter (d_{max}) in [mm] is entered. d_{max} is reached when DCALC1-DMAX switches to HIGH.

In C1307 a hysteresis for resetting the display signal is set. The entry in [%] relates to the absolute values in C1305 and C1306.

Converting the diameter (d) to 1/d

In configurations with a speed forward control it is common to multiply the precontrol signal with the reciprocal value of the diameter (d). This value is output at DCALC1-OUT.

► C1308 = 0: DCALC1-OUT = d

► C1308 = 1: DCALC1-OUT = 1/d

For the conversion to 1/d the reference value for the diameter has to be defined in C1309, for which the signal at DCALC1-OUT is to be 100 %.

► Normally C1309 corresponds to the minimum diameter in C1305 (d_{min}).

In order to ensure a continuous transition when setting new diameter values, a ramp function generator is activated if C1310 > 0 s.

Web break monitoring

A window comparator compares the corresponding newly calculated value to the value last filtered.

► In C1311 the maximum difference in [%] between the two values is defined.

► DCALC1-I=0 is set to LOW if the maximum difference is exceeded.

Formulas for calculation

Current diameter (C1328)

$$\text{C1328 [mm]} = \frac{\text{DCALC1-N-LINE [inc]}}{\text{DCALC1-N-WIND [inc]}} \cdot \frac{\text{C1300 [rpm]}}{\text{C1301 [rpm]}} \cdot \text{C1304 [mm]}$$

Output signal at DCALC1-OUT

For C1308 = 0 (DCALC1-OUT = d):

$$\text{DCALC1-OUT [\%]} = \frac{\text{C1328 [mm]}}{\text{C1304 [mm]}} \cdot 100\ \%$$

For C1308 = 1 (DCALC1-OUT = 1/d):

$$\text{DCALC1-OUT [\%]} = \frac{\text{C1304 [mm]}}{\text{C1328 [mm]}} \cdot \frac{\text{C1309 [mm]}}{\text{C1304 [mm]}} \cdot 100\ \%$$

Note!

The value at DCALC1-OUT is limited by the maximum reel diameter (C1306) and the minimum reel diameter (C1305).

8.2.2 Master frequency input (DFIN)

Description

The function block calculates a speed signal from the rectangular signals at X9. TTL signals and HTL signals can be connected. The zero track can be selected as an option.

The edge changes are detected every 1 ms and result directly in the output value.

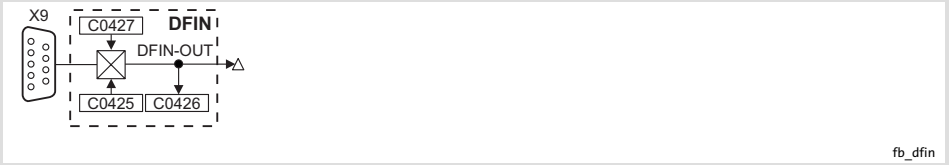

Fig. 8.2-2 Digital frequency input (DFIN)

Codes for parameter setting

Code		Possible settings				IMPORTANT	
No.	Name	Lenze	Selection				
C0425	DFIN const	3	0	256 inc/rev		Constant of the master frequency input, function block DFIN ● Output signal at the connected encoder or at the upstream controller in the event of a master frequency cascade/master frequency bus	📖 8.2-5
			1	512 inc/rev			
			2	1024 inc/rev			
			3	2048 inc/rev			
			4	4096 inc/rev			
			5	8192 inc/rev			
			6	16384 inc/rev			
C0426	DIS: OUT		-36000	{1 rpm}	36000	Output signal of the master frequency input, function block DFIN ● Display only	
C0427	DFIN function	0				Function of the master frequency input, function block DFIN	
			0	2-phase		● Phase-displaced signal sequence	
			1	A pulse/B dir		● Control of direction of rotation via track B	
			2	Pulse A or B		● Control of speed and direction of rotation via track A or track B	

Evaluating input signals

In C0427 the different modes for the evaluation of the input signals can be selected.

C0427 = 0 (phase-displaced signal sequence)

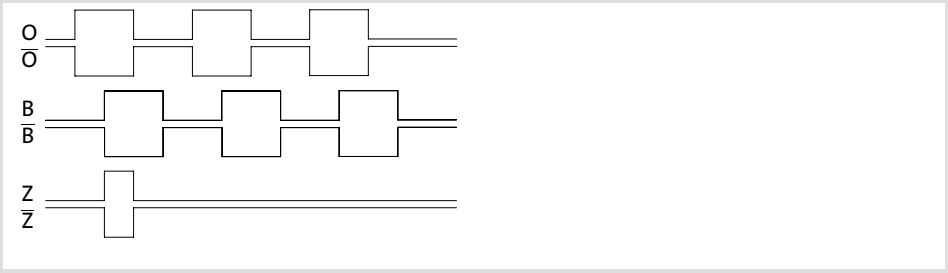

Fig. 8.2-3 Phase-displaced signal sequence (CW rotation)

Clockwise rotation	Track A leads track B by 90 ° (positive value at DFIN-OUT)
Counter-clock wise rotation	Track A lags track B by 90 ° (negative value at DFIN-OUT)

C0427 = 1 (control of the direction of rotation via track B)

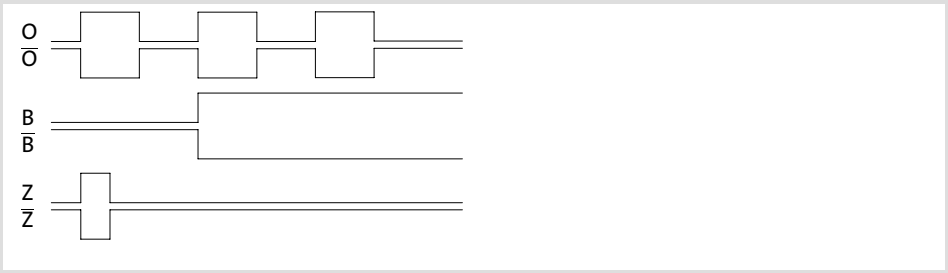

Fig. 8.2-4 Control of direction of rotation via track B

Clockwise rotation	Track A transmits the speed Track B = LOW (positive value at DFIN-OUT)
Counter-clock wise rotation	Track A transmits the speed Track B = HIGH (negative value at DFIN-OUT)

C0427 = 2 (control of speed and direction of rotation via track A or track B)

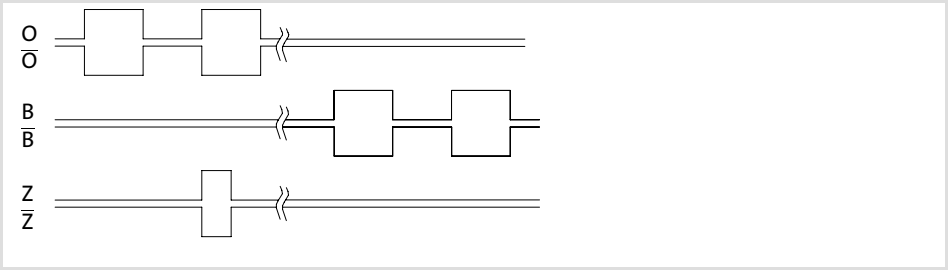

Fig. 8.2-5 Control of speed and direction of rotation via track A or track B

Clockwise rotation	Track A transmits the speed and direction of rotation (positive value at DFIN-OUT) Track B = LOW
Counter-clock wise rotation	Track B transmits the speed and direction of rotation (negative value at DFIN-OUT) Track A = LOW

Adjusting the output signal

In C0425 the output signal can be adapted:

► To the encoder at X9 or

► To the upstream controller with master frequency cascade/master frequency bus.

Transfer function

Calculating the output signal:

$$\text{DFIN-OUT [rpm]} = \text{f [Hz]} \cdot \frac{60}{\text{C0425}}$$

Example:

The input frequency amounts to 200 kHz, the number of increments corresponds to 2048 inc/rev. (C0425 = 3).

$$\text{DFIN-OUT [rpm]} = 200000\ \text{Hz} \cdot \frac{60}{2048} = 5859\ \text{rpm}$$

Signal adaptation

Signal adaptations other than by squaring in C0425 can be achieved by connecting a function block.

Example:

The function block CONV3 shall convert the speed signal into a quasi analog signal.

Calculating the output signal at CONV3:

$$\text{CONV3-OUT [\%]} = \text{f [Hz]} \cdot \frac{0.4}{\text{C0425}} \cdot \frac{\text{C0950}}{\text{C0951}}$$

Interconnecting function blocks:

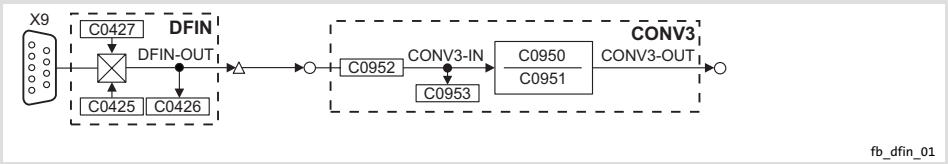

Fig. 8.2-6 Digital frequency input (DFIN) with connected converter

Note!

If a master frequency is output to DFOUT-AN-IN or DFOUT-DF (C0540 = 0 or C0540 = 1) **and** an incremental encoder is evaluated via X8, the function block DFIN cannot be used anymore.

If the input signals at X8 or X9 are output to X10, (C0540 = 4 or C0540 = 5), this restriction does not exist.

8.2.3 Master frequency output (DFOUT)

Description

The function block creates rectangular signals from an analog signal or speed signal, which are output via X10. Alternatively, you can set the master frequency output to a signal output at X8 or X9.

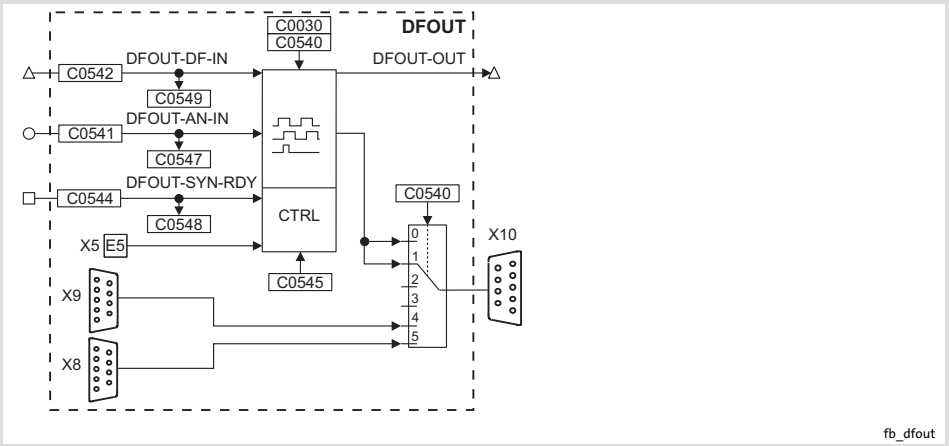

Fig. 8.2-7 Digital frequency output (DFOUT)

Codes for parameter setting

Code		Possible settings			IMPORTANT	
No.	Name	Lenze	Selection			
C0030	DFOUT const	3	0	256 inc/rev	Function block DFOUT ● Setting of the constant (increments per revolution) for the master frequency output X10	📖 8.2-8
			1	512 inc/rev		
			2	1024 inc/rev		
			3	2048 inc/rev		
			4	4096 inc/rev		
			5	8192 inc/rev		
			6	16384 inc/rev		

Code		Possible settings				IMPORTANT	
No.	Name	Lenze	Selection				
C0540 STOP	Function	0				Function selection, function block DFOUT ● Output signal at X10	📖 8.2-8
			0	Analog input	Analog input	Signal at DFOUT-AN-IN is output. Zero track can be input externally.	
			1	PH diff input	Phase difference input	Signal at DFOUT-DF-IN is output. Zero track can be input externally.	
			2		Not assigned		
			3		Not assigned		
			4	X10 = X9	X9 is output on X10	The input signals are buffered C0030 is without function	
			5	X10 = X8	X8 is output on X10		
C0541 STOP	CFG: AN-IN	5001	MCTRL-NACT		📖 Selection list 1	Configuration of analog input signal, function block DFOUT ● Signal in [%] of C0011	
C0542 STOP	CFG: DF-IN	1000	FIXEDPHI-0		📖 Selection list 4	Configuration of input signal, function block DFOUT ● Speed signal	
C0544 STOP	CFG: SYN-RDY	1000	FIXED0		📖 Selection list 2	Configuration of digital input signal, function block DFOUT ● DFOUT-SYN-RDY = HIGH: Generating a zero pulse	
C0545	PH offset	0	0	{1 inc.}	65535	Phase offset, function block DFOUT ● Displacing the zero pulse generated via DFOUT-SYN-RDY by up to 360 ° ● 1 rev. = 65535 inc (360 °)	

Output signals at X10

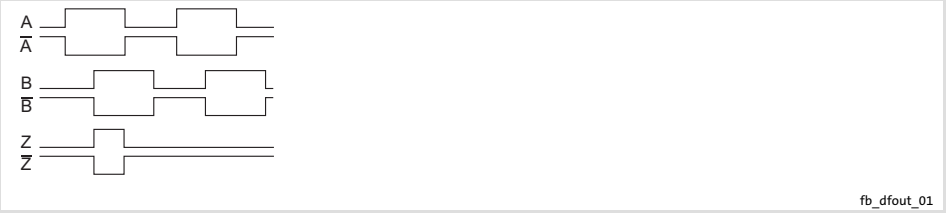

Fig. 8.2-8 Signal sequence for CW rotation (definition)

► The output signals correspond to the simulation of an incremental encoder:
  – Track A and track B and, if required, the zero track and the corresponding inverted tracks are output. The levels are TTL-compatible.
  – Positive input values (CW rotation) result in the represented signal sequence.

► With negative input values (CCW rotation) track B leads track A by 90 °.

► The encoder constant of the encoder simulation is set in C0030.

C0540 serves to define which input signal or signal source shall be active. The zero track is output according to the selected setting.

C0540	Signal at X10
0	DFOUT-AN-IN is output to X10. Zero track can be selected externally.
1	DFOUT-DF-IN is output to X10. Zero track can be selected externally.
2	No function
3	No function
4	The signal at input X9 is electrically amplified and directly output (C0030 is without function)
5	The signal at input X8 is electrically amplified and directly output (C0030 is without function)

Note!

The settings C0540 = 0 and C0540 = 1 are not possible when a connection to the master frequency input X9 (DFIN) was established and an incremental encoder was connected via X8 (C0025 = 100, 110 ... 113).

Output of analog signal as frequency

Setting: C0540 = 0

► The analog signal at the input DFOUT-AN-IN is converted into a frequency and output to X10.

► Frequency calculation:

$$f\,[\mathrm{Hz}] = \text{DFOUT-AN-IN}\,[\%] \cdot \frac{\text{C0030}}{100} \cdot \frac{\text{C0011}}{60}$$

Example:

The input signal at DFOUT-AN-IN amounts to 50 %, the number of increments corresponds to 2048 inc/rev. (C0030 = 3) and the maximum speed (C0011) is set to 3000 rpm.

$$f\,[\mathrm{Hz}] = 50\,\% \cdot \frac{2048}{100} \cdot \frac{3000}{60} = 51200\ \mathrm{Hz}$$

Generating an index pulse

An artificial index signal can be generated for the output frequency.

1. Set the input DFOUT-SYN-RDY = HIGH.
   – 360° later, a LOW-HIGH edge generates the index pulse.
   – Then a zero pulse is generated every 360 ° according to C0030.
2. If necessary, shift the zero pulse by up to 360 ° (65536 inc = 360 °) via C0545.

Output of the speed signal as frequency

Setting: C0540 = 1

► The speed signal at the input DFOUT-DF-IN is converted into a frequency and output to X10.

► Frequency calculation:

$$f\,[\mathrm{Hz}] = \text{DFOUT-DF-IN}\,[\mathrm{rpm}] \cdot \frac{\text{C0030}}{60}$$

Example:

The input signal at DFOUT-DF-IN amounts to 3000 rpm, the number of increments corresponds to 2048 inc/revolution (C0030 = 3).

$$f\,[\mathrm{Hz}] = 3000\ \mathrm{rpm} \cdot \frac{2048}{60} = 102400\ \mathrm{Hz}$$

Generating a zero pulse

An artificial zero pulse can be generated for the output frequency.

1. Set the input DFOUT-SYN-RDY = HIGH.
   – 360° later, a LOW-HIGH edge generates the zero pulse.
   – Then a zero pulse is generated every 360 ° according to C0030.
2. If necessary, shift the zero pulse by up to 360 ° (65536 inc = 360 °) via C0545.

Signal at X8 is directly output at X10

- ► The input signals at X8 are amplified electrically and output directly.
- ► The signals depend on the assignment of the input X8.
- ► The codes C0030, C0545 and the output DFOUT-OUT have no function.
- ► The zero track is only output if it is connected to X8.

Signal at X9 is directly output at X10

- ► The input signals at X9 are amplified electrically and output directly.
- ► The signals depend on the assignment of the input X9.
- ► The codes C0030, C0545 and the output DFOUT-OUT have no function.
- ► The zero track is output if it is connected to X9.

8.2.4 Master frequency ramp-function generator (DFRFG)

Description

The function block creates acceleration and deceleration ramps for the operation with master frequency, thus leading the drive to the master frequency with angular synchronism.

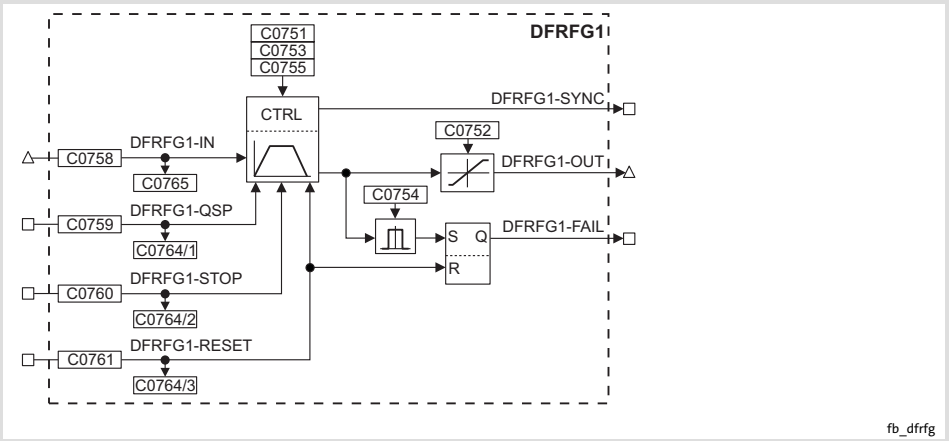

Fig. 8.2-9 Digital frequency ramp function generator (DFRFG1)

Codes for parameter setting

Code		Possible settings				IMPORTANT	
No.	Name	Lenze	Selection				
C0751	DFRFG1 Tir	1.000	0.001	{0.001 s}	999.999	Acceleration time T_{ir}, function block DFRFG1	📖 8.2-13
C0752	Max speed	3000	1	{1 rpm}	16000	Maximum speed, function block DFRFG1 ● Maximum speed-up (speed)	
C0753	DFRFG1 QSP	0.000	0.000	{0.001 s}	999.900	Deceleration time T_{if} for quick stop, function block DFRFG1	
C0754	PH error	$2 \cdot 10^9$	10	{1}	$2 \cdot 10^9$	Following error, function block DFRFG1 ● Maximum permissible phase difference between setpoint an actual phase ● 1 rev. = 65535 inc	
C0755	Syn window	100	0	{1 inc.}	65535	Synchronisation window, function block DFRFG1 ● 1 rev. = 65535 inc	

Code		Possible settings			IMPORTANT	
No.	Name	Lenze	Selection			
C0758 STOP	CFG: IN	1000	FIXEDPHI-0	🕮 Selection list 4	Configuration of input signal, function block DFRFG1 ● Speed/phase setpoint signal	🕮 8.2-13
C0759 STOP	CFG: QSP	1000	FIXED0	🕮 Selection list 2	Configuration of digital input signal, function block DFRFG1 ● HIGH = quick stop active	
C0760 STOP	CFG: STOP	1000	FIXED0	🕮 Selection list 2	Configuration of input signal, function block DFRFG1 ● HIGH = Status of the profile generator is maintained, setpoint is saved	
C0761 STOP	CFG: RESET	1000	FIXED0	🕮 Selection list 2	Configuration of input signal, function block DFRFG1 ● HIGH = resetting the integrators	
C0764			0	1	Function block DFRFG1 ● Display of the signals linked in C0759, C0760 and C0761	
1	DIS: QSP					
2	DIS: STOP					
3	DIS: RESET					
C0765	DIS: IN		-32767 {1 rpm}	32767	Function block DFRFG1 ● Display of the signal linked in C0758	

Profile generator

Stop!

Do not operate the drive with this function at the torque limitation M_{max}, I_{max}.

The profile generator creates ramps which automatically compensate the resulting phase displacement. If you do not need this compensation, set DFRFG-RESET = HIGH.

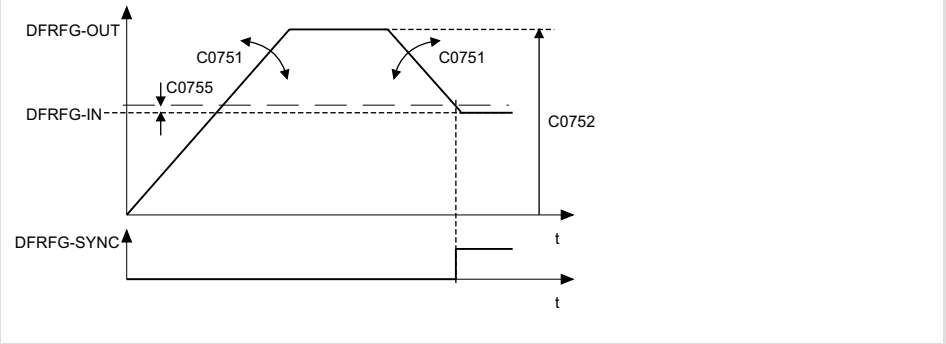

Fig. 8.2-10 Synchronisation on DFRFG

C0751	Setting the deceleration and acceleration time
C0752	Setting the maximum speed
C0755	Setting the switching point

When the actual angle has reached its setpoint and the output signal corresponds to the input signal, the drive runs in synchronism and the output DFRFG1-SYNC is set to HIGH. At the same time the profile generator is switched to the inactive state.

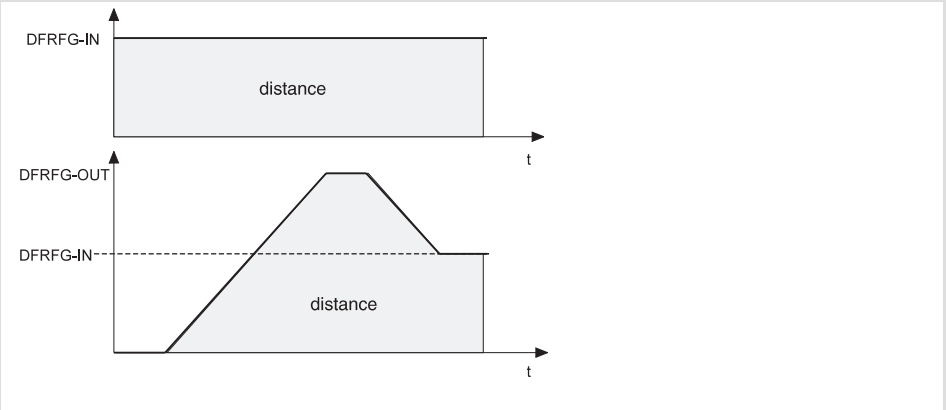

Fig. 8.2-11 Speed-time diagram DFRFG

The number of increments at DFRFG1-IN (master drive) defines the set phase. The set phase can be displayed as a path. The speed-time diagram shows the distance covered (angle) as the area below the speed profile. When synchronisation is reached, master and slave have covered the same distance (phase).

Quick stop (QSP)

Quick stop takes the drive out of the system and brings it to standstill. Setpoints and actual values are continued to be detected.

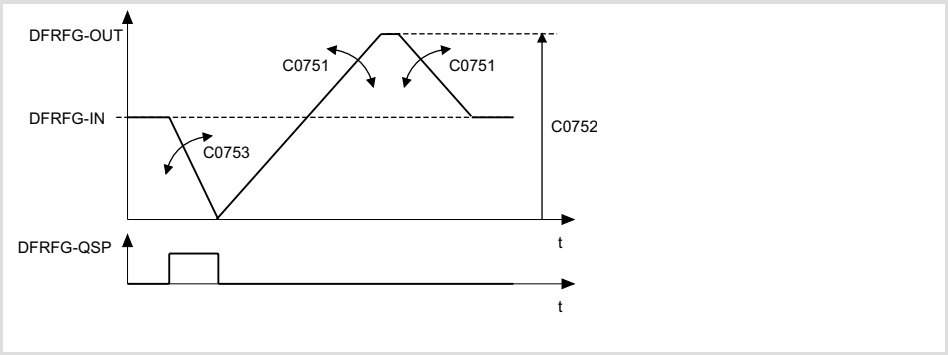

Fig. 8.2-12 Quick stop DFRFG

C0751	Acceleration and deceleration time of the profile generator
C0752	Maximum speed
C0753	Setting the deceleration time T_{if} for QSP

► QSP is activated using DFRFG1-QSP = HIGH.

► With DFRFG1-QSP = LOW, QSP is deactivated. The setpoint is approached via the profile generator.

Ramp function generator stop

The function “ramp-function generator stop” keeps the state of the profile generator during operation. Setpoints and actual values are continued to be detected.

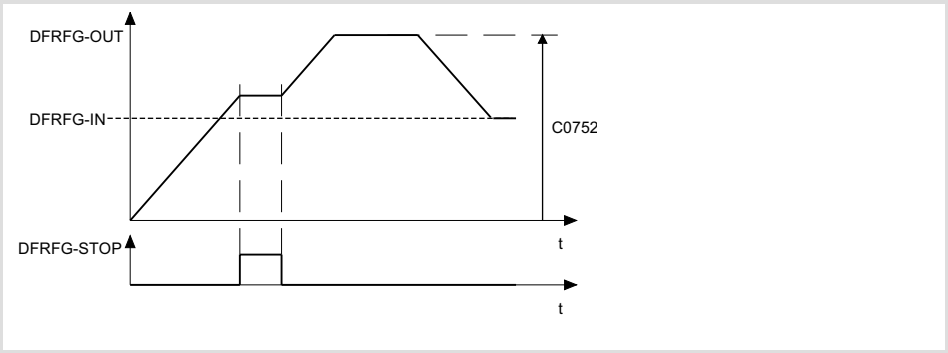

Fig. 8.2-13 Ramp function generator stop

C0752	Maximum speed

► The function ”ramp-function generator stop” is activated with DFRFG1-STOP = HIGH.

– The last status is output at DFRFG1-OUT.

► With DFRFG1-STOP = LOW the function “ramp-function generator stop” is reset. The setpoint is approached via the profile generator.

Reset ramp generator

► With DFRFG1-RESET = HIGH, the profile generator is activated. Internally added-up set phases and actual phases are reset.

► The set phase is detected using a HIGH-LOW signal at DFRFG1-RESET.

Monitoring the phase difference

The profile generator can accept a phase difference between the set phase and the actual phase of up to ±2140000000 inc (= 32000 revolutions).

- ► A limit value can be set for the permissible phase difference via C0754.
- ► If the limit value is reached, DFRFG1-FAIL is set to HIGH and the value is saved.
- ► DFRFG1-FAIL is only set to LOW with DFRFG1-RESET = HIGH.

8.2.5 Master frequency processing (DFSET)

Description

The function block prepares the master frequency for the controller. You can select values for the stretching and gearbox factor and carry out a speed or phase trimming.

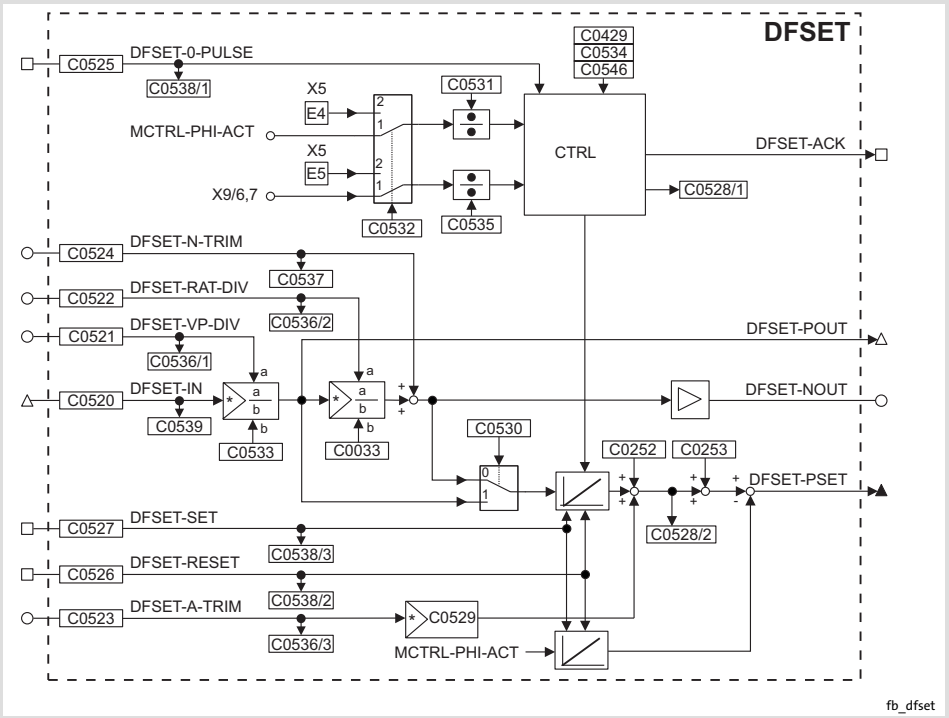

Fig. 8.2-14 Digital frequency processing (DFSET)

Codes for parameter setting

Code		Possible settings				IMPORTANT	
No.	Name	Lenze	Selection				
C0033	Gearbox denom	1	1	{1}	32767	Gearbox factor - denominator of the function block DFSET	📖 8.2-18
C0252	Angle offset	0	-245760000	{1 inc.}	245760000	Phase offset for master frequency processing, function block DFSET ● Fixed phase offset for digital frequency configuration ● 1 rev. = 65536 inc	📖 8.2-18
C0253	Angle n-trim	→	-32767	{1 inc.}	32767	Speed-dependent phase trimming for the master frequency processing, function block DFSET → depending on C0005, C0025, C0490 ● Change of C0005, C0025 or C0490 resets C0253 to the corresponding Lenze setting ● 1 rev. = 65536 inc ● Value in C0253 is reached at 15000 rpm	

Code		Possible settings			IMPORTANT	
No.	Name	Lenze	Selection			
C0520 STOP	CFG: IN	1000	FIXEDPHI-0	📖 Selection list 4	Configuration of input signal, function block DFSET ● Input of speed / phase setpoint signal	📖 8.2-18
C0521 STOP	CFG: VP-DIV	1000	FIXED0%	📖 Selection list 1	Configuration of analog input signal, function block DFSET ● Signal for numerator of stretching factor ● 100 % = 16384 inc	
C0522 STOP	CFG: RAT-DIV	1000	FIXED0%	📖 Selection list 1	Configuration of analog input signal, function block DFSET ● Signal for numerator of gearbox factor ● 100 % = 16384 inc	
C0523 STOP	CFG: A-TRIM	1000	FIXED0%	📖 Selection list 1	Configuration of analog input signal, function block DFSET ● Signal for phase trimming via offset multiplier (C0529) ● 100 % = 16384 inc	
C0524 STOP	CFG: N-TRIM	1000	FIXED0%	📖 Selection list 1	Configuration of analog input signal, function block DFSET ● Signal for speed trimming ● Signal in [%] of C0011	
C0525 STOP	CFG: 0-PULSE	1000	FIXED0	📖 Selection list 2	Configuration of digital input signal, function block DFSET ● Signal for one-time zero pulse activation ● HIGH = release for zero pulse synchronisation	
C0526 STOP	CFG: RESET	1000	FIXED0	📖 Selection list 2	Configuration of digital input signal, function block DFSET ● Signal for reset of integrators ● HIGH sets – Position difference = 0 – DFSET-PSET = 0 – DFSET-PSET2 = 0	
C0527 STOP	CFG: SET	1000	FIXED0	📖 Selection list 2	Configuration of digital input signal, function block DFSET ● HIGH = Set phase integrators to equal values ● LOW-HIGH edge sets DFSET-PSET = 0 ● HIGH-LOW edge sets DFSET-PSET to the current value of MCTRL-PHI-SET ● DFSET-SET has a higher priority than DFSET-RESET	
C0528			$-2 \cdot 10^9$ {1} $2 \cdot 10^9$		Function block DFSET ● Display only	📖 8.2-18
1	DIS: 0-pulse A				Phase difference between two zero pulses	
2	DIS: Offset				Offset = C0523 × C0529 + C0252	

Code		Possible settings				IMPORTANT	
No.	Name	Lenze	Selection				
C0529	Multip offset	1	-20000	{1}	20000	Offset multiplier, function block DFSET ● Multiplier for the phase offset (C0252)	📖 8.2-18
C0530	DF evaluation	0	0	with factor	With gearbox factor	Master frequency evaluation, function block DFSET ● Evaluation of the setpoint integrator	
			1	no factor	Without gearbox factor		
C0531	Act 0 div	1	1	{1}	16384	Actual zero pulse divisor, function block DFSET	
C0532	0-pulse/TP	1	1	0-pulse	Index pulse	Zero pulse / touch probe, function block DFSET ● Zero pulse of the feedback system or touch probe	
			2	Touch probe	Touch probe		
C0533	Vp denom	1	1	{1}	32767	Gain factor of denominator V_p, function block DFSET	
C0534	0 pulse fct	0				Zero pulse function, function block DFSET ● Synchronising the drive	📖 8.2-18
			0	inactive	Inactive		
			1	Continuous	Continuous synchronisation, correction in the shortest possible way		
			2	Cont. switch	Continuous synchronisation, correction in the shortest possible way	After a LOW-HIGH signal to DFSET-0-pulse, the zero track is synchronised once	
			10	Once, fast way	One-time synchronisation, correction in the shortest possible way		
			11	Once, CW	One-time synchronisation, correction in direction of rotation to the right		
			12	Once, CCW	One-time synchronisation, correction in direction of rotation to the left		
			13	Once, 2*0-pulse	One-time synchronisation, correction is detected from setpoint pulse and actual pulse and corrected to the corresponding direction		
C0535	Set 0 div	1	1	{1}	16384	Desired zero pulse divisor, function block DFSET	📖 8.2-18

Code		Possible settings				IMPORTANT	
No.	Name	Lenze	Selection				
C0536			-32767	{1}	32767	Function block DFSET ● Display of the signals linked in C0521, C0522 and C0523	📖 8.2-18
1	DIS: VP-DIV						
2	DIS: RAT-DIV						
3	DIS: A-TRIM						
C0537	DIS: N-TRIM		-199.99	{0.01 %}	199.99	Function block DFSET ● Display of the signal linked in C0524	
C0538			0		1	Function block DFSET ● Display of the signals linked in C0525, C0526 and C0527	
1	DIS: 0-pulse						
2	DIS: RESET						
3	DIS: SET						
C0539	DIS: IN		-6000	{1 rpm}	6000	Function block DFSET ● Display of the signal linked in C0520	
C0546	Min inc/rev	1000	1	{1 inc.}	2147483647	Masking of the touch probe signal, function block DFSET ● Suppressing interference pulses at X5/E4 (actual pulse of touch probe signal) ● The size of the masking window between two actual pulses is set	📖 8.2-18

Setpoint conditioning with stretching and gearbox factor

Stretching factor

The stretching factor defines the ratio with which the drive is to run faster or slower than the setpoint.

The setpoint at DFSET-IN is evaluated. The result is output to DFSET-POUT.

$$\text{DFSET-POUT} = \text{DFSET-IN} \cdot \frac{\text{DFSET-VP-DIV}}{\text{C0533}}$$

The stretching factor results from numerator and denominator.

- ► The numerator (DFSET-VP-DIV) can be defined as a variable from the analog signal source or as a fixed value from a code.
- ► Enter the denominator under C0533.

Note!

When calculating the stretching factor, the input signal at DFSET-VP-DIV is not processed in a scaled mode. A signal of 100 % corresponds to a count value of 16384.

Gearbox factor

The gearbox factor defines the ratio by means of which the drive speed can be changed additionally.

The setpoint at DFSET-IN, multiplied by the stretching factor, is evaluated. The result is output at DFSET-NOUT [in % of n_{max} (C0011)].

$$\text{DFSET-NOUT} = \text{DFSET-IN} \cdot \frac{\text{DFSET-VP-DIV}}{\text{C0533}} \cdot \frac{\text{DFSET-RAT-DIV}}{\text{C0033}}$$

The gearbox factor results from numerator and denominator.

- ► The numerator (DFSET-RAT-DIV) can be defined as a variable from the analog signal source or as a fixed value from a code.
- ► Enter the denominator under C0033.

Note!

When calculating the gearbox factor, the input signal at DFSET-RAT-DIV is not processed in a scaled mode. A signal of 100 % corresponds to a count value of 16384.

Processing of correction values

Speed trimming

The speed trimming serves to add correction values, e. g. by a superimposed control loop. This enables the drive to accelerate or decelerate.

► At the speed trimming, an analog value at DFSET-N-TRIM is added to the speed setpoint.

Phase trimming

The phase trimming adds a setpoint at DFSET-A-TRIM to the phase setpoint and changes the rotor position to the setpoint with the number of increments provided in either direction (drive is leading or lagging). The phase is trimmed within a range of ±32767 increments (corresponds to ±½ revolution). Every analog signal can be used as a source.

► The input is done is increments (1 revolution ≙ 65536 increments).

► An analog input signal at DFSET-A-TRIM of

100 % ≙ 1/4 revolution ≙ 16384 increments.

► You can extend the setting range with a multiplier (C0529).

Phase offset

The phase offset (C0252) adds a fixed phase offset to the setpoint of the drive.

Phase adjustment proportional to speed

With a phase adjustment proportional to speed, the phase leads or lags with increasing speed.

► Enter the offset in increments under C0253.

► The set phase offset is reached at 15000 rpm of the drive (linear relationship).

Note!

Phase corrections are only reasonable if the controller is operated with incremental encoder feedback and the calculated following error is used for correcting the speed setpoint. The following error is output to DFSET-PSET.

Synchronising to zero track or touch probe

Stop!

When the synchronisation via the terminals X5/E4 and X5/E5 (C0532 = 2) is activated, these terminals must not contain any other signal connections.

When selecting a basic configuration via C0005, the terminals contain a basic setting.

Selection of synchronisation	
C0532 = 1 (zero pulse)	The synchronisation is performed on the zero track of the digital frequency input X9 and the zero track of the feedback system set under C0490.
C0532 = 2 (touch probe)	The synchronisation is performed using the terminals X5/E4 (actual pulse) and X5/E5 (setpoint pulse).

Touch probe initiators can have delay times which cause a speed-dependent phase offset.

Set the correction for the phase offset under C0429.

$$C0429 = 16384 \cdot \text{Correction value}$$

The correction value for the phase offset can be obtained from the data sheet of the initiator, or contact the manufacturer.

Synchronisation modes

C0534	Synchronisation mode	Note
0	Inactive	Function inactive
1	Continuous synchronisation with correction in the shortest possible way	
2	Continuous synchronisation with correction in the shortest possible way	After a LOW-HIGH signal to DFSET-0-pulse, the zero track is synchronised once
10	One synchronisation. A phase deviation is corrected in the shortest possible way.	
11	One synchronisation. A phase deviation is corrected in CW direction.	
12	One synchronisation. A phase deviation is corrected in CCW direction.	
13	Single synchronisation. A phase difference is determined between setpoint pulse and actual pulse and is corrected to the corresponding direction of rotation according to the sign.	

► During synchronisation, DFSET-ACK is set to HIGH.

Note!

Drive synchronisation is only reasonable if the controller is operated with incremental encoder feedback and the calculated following error is used for correcting the speed setpoint. The following error is output to DFSET-PSET.

8.2.6 Internal motor control with V/f characteristic control (MCTRL1)

Description

The function block MCTRL1 controls the motor. It is always carried out so that it does not need to be entered into the processing table.

In the Lenze setting, the controller is set to V/f characteristic control (C0006 = 5). Without other settings and with analog setpoint selection via X6/1, X6/2 and connected asynchronous standard motor (50 Hz/400 V) commissioning can be executed immediately.

The V/f characteristic control is suitable for single drives, multi-motor drives, synchronous motors, reluctance motors and asynchronous motors.

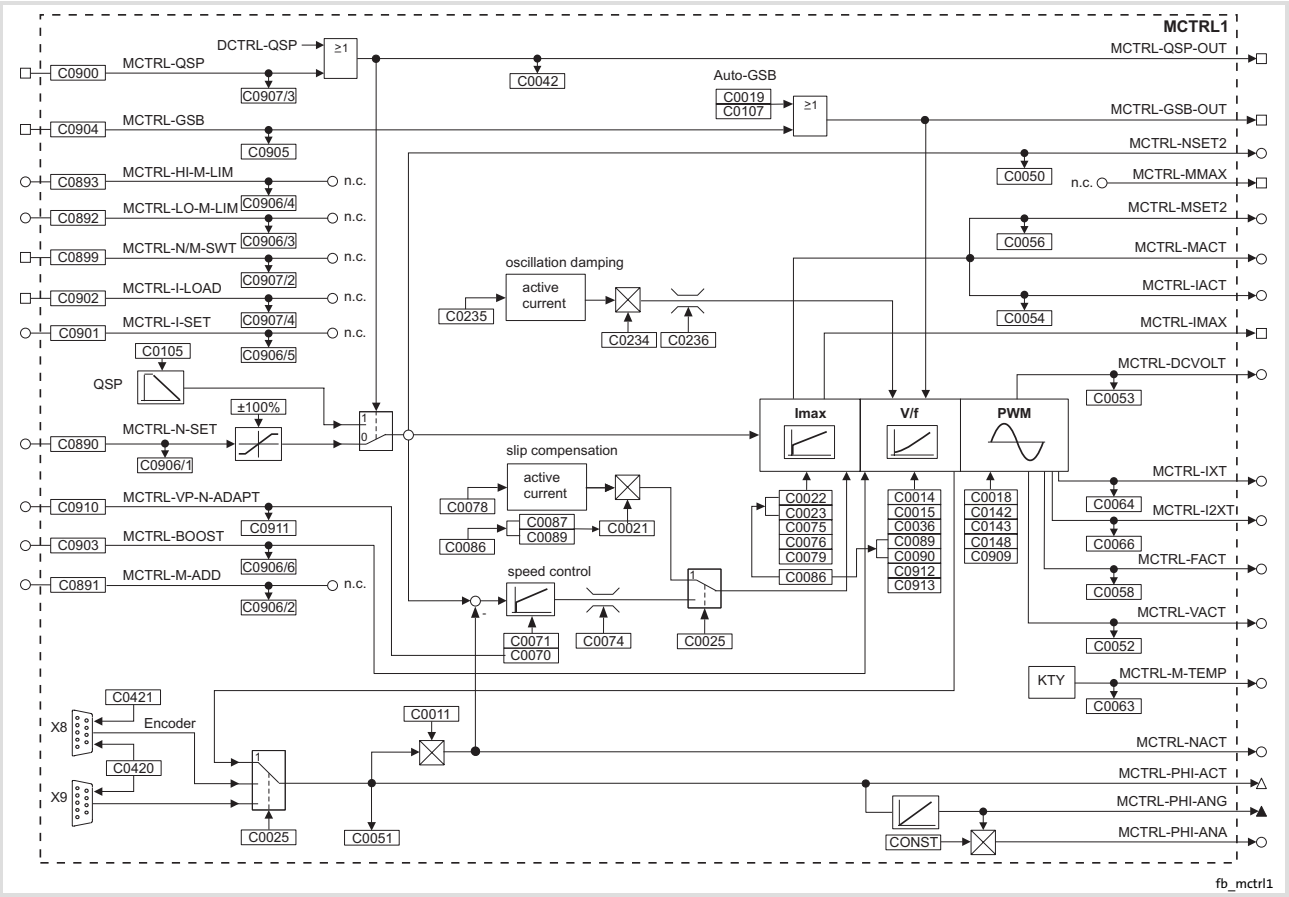

Fig. 8.2-15 Internal motor control with V/f characteristic control (MCTRL1)

Codes for parameter setting

Code		Possible settings					IMPORTANT		
No.	Name	Lenze	Selection						
C0006 STOP	Op mode	5					Selection of the operating mode for the motor control		
			1	vector ctrl		Vector control without or with speed feedback	**In case of the first selection enter the motor data and identify them with C0148.**		📖 6.8-8
			5	V / f		V/f characteristic control	Commissioning without identification of the motor data is possible ● Advantage of identification with C0148: Improved smooth running at low speeds		📖 6.8-4
C0010	N_{min}	0	0		{1 rpm}	36000	● Reference value for the absolute and relative setpoint selection for the acceleration and deceleration times ● C0059 must be set correctly ● Set C0010 < C0011 ● C0010 is only effective in case of analog setpoint selection via AIN1 **Important: For parameter setting via interface, major changes in one step should only be made when the controller is inhibited.**	Minimum speed	📖 6.10-1
C0011	N_{max}	3000	0		{1 rpm}	36000		Maximum speed	
C0014	V/f charact.	0					Characteristic in the V/f characteristic control mode		📖 8.2-25
			0	Linear			Linear V/f characteristic		
			1	square			Square V/f characteristic		
C0015	Rated freq	50	10		{1 Hz}	5000	V/f-rated frequency In C0015 you can set a base frequency which differs from the rated motor frequency (C0089) ● Lenze setting: C0015 = C0089 ● Changing C0086 or C0089 overwrites the value in C0015		📖 8.2-25
C0016	Umin boost	0.00	0.00		{0.01 %}	100.00	U_{min} boost (FCODE) ● C0016 = 1 % corresponds to a boost of 1 % of the rated motor voltage (C0090) ● Code is freely configurable		📖 6.8-4

Code		Possible settings				IMPORTANT	
No.	Name	Lenze	Selection				
C0018	fchop	6				Switching frequency of the inverter ● General rule: the lower the switching frequency the – lower the power loss – higher the noise generation – better the concentricity factor – Observe derating information at high switching frequencies ● The max. output frequency (f_{out}) amounts to: – f_{chop} = 16 kHz ⇒f_{out} = 600 Hz – f_{chop} = 8 kHz ⇒f_{out} = 300 Hz – f_{chop} = 4 kHz ⇒f_{out} = 150 Hz – f_{chop} = 2 kHz ⇒f_{out} = 150 Hz	📖 6.9-1
			0	auto chop	automatic change-over of the switching frequency between 16/8/2 kHz		
			1	2 kHz sin	optimised smooth running		
			2	4 kHz f_top	power-optimised		
			3	8 kHz f_top	power-optimised		
			4	8 kHz sin	noise optimised		
			5	16 kHz sin	noise optimised		
			6	auto 8/2 kHz	noise / power-optimised with automatic change-over to low switching frequency		
C0021	slipcomp	→	-20.00	{0.01 %}	20.00	Slip compensation → Change of C0086, C0087 or C0089 sets C0021 to the calculated rated slip of the motor ● When changing over to the vector control mode, C0021 is set to 0	📖 6.11-1 📖 8.2-25 📖 8.2-48
C0022	IMAX CURRENT	→	0	{0.01 A}	-	I_{max} limit in motor mode → Depending on C0086	📖 6.6-13
C0023	Imax gen.	→	0	{0.01 A}	-	I_{max} limit in generator mode → Depending on C0086	📖 6.6-13
C0036	DC brk value	0.0	0.0	{0.1 A}	-	Set DC braking current → depends on the controller	📖 8.2-25 📖 8.2-48
C0042	DIS: QSP					Quick stop ● Display only	📖 8.2-25 📖 8.2-48
			0	QSP inactive		Quick stop is not active	
			1	QSP active		Quick stop is active	
C0050	MCTRL-NSET2		-100.00	{0.01 %}	100.00	Speed setpoint, function block MCTRL ● Display of the speed in [%] of C0011	📖 8.2-25 📖 8.2-48
C0051	MCTRL-NACT		-36000	{1 rpm}	36000	Actual speed value, function block MCTRL ● Read only	📖 8.2-25 📖 8.2-48
C0052	MCTRL-Umot		0	{1 V}	800	Motor voltage, function block MCTRL ● Read only ● MCTRL-VACT = 100 % = C0090	📖 8.2-25 📖 8.2-48
C0053	UG-VOLTAGE		0	{1 V}	900	DC-bus voltage, function block MCTRL ● Read only ● MCTRL-DCVOLT = 100 % = 1000 V	📖 8.2-25 📖 8.2-48
C0054	IMot		0.0	{0.1 A}	500.0	Current motor current, function block MCTRL ● Read only ● MCTRL-IACT = 100 % = C0022	📖 8.2-25 📖 8.2-48

Code		Possible settings				IMPORTANT	
No.	Name	Lenze	Selection				
C0056	MCTRL-MSET2		-100.00	{0.01 %}	100.00	Read only. The output signal depends on the operating mode: ● Current motor current in case of V/f characteristic control, function block MCTRL1 ● Torque setpoint in case of vector control, function block MCTRL2	📖 8.2-25 📖 8.2-48
C0058	MCTRL-FACT		-600.0	{0.1 Hz}	600.0	Output frequency ● Display only ● MCTRL-FACT = 100.0 % = 1000.0 Hz	📖 8.2-25 📖 8.2-48
C0063	Mot temp		0	{1 °C}	200	Motor temperature ● Read only ● Monitoring of the motor temperature must be activated. ● KTY at X8/5, X8/8: – At 150 °C, TRIP OH3 is set – Early warning is possible via OH7, temperature is set in C0121 ● PTC, thermal contact at T1, T2: – Release sets TRIP or warning OH8	📖 8.2-25 📖 8.2-48
C0064	Utilization		0	{1 %}	150	Device utilisation I×t ● Read only ● Device utilisation during the last 180 s of operating time ● C0064 > 100 % releases warning OC5 ● C0064 > 140 % limits the output current of the controller to 67 % of the maximum current in C0022	📖 8.2-25 📖 8.2-48
C0066	MOTOR LOAD		0	{1 %}	250	Motor load I^2×t	📖 8.2-25 📖 8.2-48
C0070	Vp speed CTRL	10.0	0.0	{0.1 }	255.9	Gain of speed controller	📖 8.2-25 📖 8.2-48
C0071	Tn speed CTRL	50	1	{1 ms}	6000	Integral-action time of speed controller C0071 = 6000 ms: No integral-action time	
C0074	limit N	10.00	0.00	{0.01 %}	100.00	Limitation of the speed controller ● Influence of the speed controller for V/f characteristic control with feedback ● max. setpoint difference in percent	📖 8.2-25 📖 8.2-48
C0075	Vp curr CTRL	0.20	0.00	{0.01 }	0.99	Gain of current controller ● Vector control: gain of current controller ● V/f characteristic control: maximum current controller	📖 8.2-25 📖 8.2-48

Code		Possible settings				IMPORTANT	
No.	Name	Lenze	Selection				
C0076	Tn curr CTRL	10.0	0.1	{0.1 ms}	2000.0	Integral-action time of current controller ● Vector control: integral-action time of current controller ● V/f characteristic control: maximum current controller ● C0076 = 2000 ms: current controller is switched off	📖 8.2-25 📖 8.2-48
C0078	Tn slip CTRL	100	1	{1 ms}	6000	Integral-action time of slip controller ● Filter time for slip compensation (C0021) ● Only active with V/f characteristic control	📖 8.2-25
C0079	Adapt I-CTRL	100.00	10.00	{0.01 %}	100.00	Adaption of the current controller ● Evaluation for the reset time T_{ni} of the current controller ● Effective for setpoint = 0 ● Is increased automatically to 100 % up to rated speed ● C0079 = 100 %: no adaption of the reset time ● C0079 < 100 %: – evaluation of the reset time:	📖 8.2-25 📖 8.2-48
C0086 STOP	Mot type	→	📖 Motor selection list			Motor type selection → depending on the controller used ● Motor selection in C0086 sets the corresponding parameters in C0021, C0022, C0081, C0087, C0088, C0089, C0090, C0091	📖 6.6-1
C0087 STOP	Mot speed	→	50	{1 rpm}	36000	Rated motor speed → depending on C0086 ● Motor selection in C0086 set the corresponding rated motor speed in C0087 ● Change of C0087 sets C0086 = 0	📖 6.6-1
C0089 STOP	Mot frequency	→	10	{1 Hz}	5000	Rated motor frequency → depending on C0086 ● Motor selection in C0086 sets the corresponding rated motor frequency in C0089 ● Change of C0089 sets C0086 = 0	📖 6.6-1
C0090 STOP	Mot voltage	→	0	{1 V}	1000	Rated motor voltage → depending on C0086 ● Motor selection in C0086 sets the corresponding rated motor voltage in C0090 ● Change of C0090 sets C0086 = 0	📖 6.6-1
C0095 STOP	Mot Io	→	0.00	{0.01 A}	1000.00	Motor magnetising current → depending on C0086, C0088 and C0091 ● Change of C0086, C0088 and C0091 sets C0095 to the Lenze setting ● Change of C0095 sets C0086 = 0	📖 6.6-1 📖 6.11-5

Code		Possible settings				IMPORTANT	
No.	Name	Lenze	Selection				
C0105	QSP Tif	5.00	0.00	{0.01 s}	999.90	Quick stop deceleration time ● The deceleration time refers to a speed variation of C0011 ... 0	📖 8.2-25 📖 8.2-48
C0107	holding time	0.00	0.00	{0.01 s}	9999.90	Hold time for automatic DC injection braking (Auto-GSB)	📖 8.2-25 📖 8.2-48
C0132 STOP	Controller enable fly delay	→	0	{1 ms}	9999	Minimum time for controller inhibit with active flying restart circuit, delays the start of the flying restart process after controller enable → depending on C0082, C0086, C0087, C0088, C0089, C0090, C0091, C0092 A change of one of the codes resets C0132 to the minimum time of the selected motor ● The time is derived from the double rotor time constant	📖 8.2-25 📖 8.2-48
C0140 STOP	select direct	0				Search direction during flying restart process ● Positive direction of rotation: The motor rotates in CW direction with view on the motor shaft ● Negative direction of rotation: The motor rotates in CCW direction with view on the motor shaft	📖 8.2-25 📖 8.2-48
			0	NSET		Only search in the direction of the applied setpoint	
			1	inv. Nset		Only search against the direction of the applied setpoint	
			2	pos.		Only search in positive direction of rotation	
			3	neg.		Only search in negative direction of rotation	
			4	Both, Nset		Search at first in the direction of the applied setpoint and then against the direction	
			5	Both, inv. Nset		Search at first against the direction and then in the direction of the applied setpoint	
			6	Both pos.		Search at first in positive then in negative direction of rotation	
			7	Both neg.		Search at first in negative then in positive direction of rotation	

Code		Possible settings				IMPORTANT	
No.	Name	Lenze	Selection				
C0142	Start options	1				Starting condition for the flying restart circuit	📖 8.2-36
			0	Start lock		● Automatic start is inhibited after – mains connection – Cancel of a message (t > 0.5 s) – Trip reset ● Flying restart circuit is inactive ● Start after HIGH-LOW-HIGH level change at X5/28	📖 8.2-65
			1	Auto start		Automatic start when X5/28 = HIGH ● Flying restart circuit is inactive	
			2	flying lock		● Automatic start is inhibited after – mains connection – Cancel of a message (t > 0.5 s) – Trip reset ● Flying restart circuit is active ● Start after HIGH-LOW-HIGH level change at X5/28	
			3	Fly restart		Automatic start when X5/28 = HIGH ● Flying restart circuit is active	
C0143	limit 2 kHz	0.0	0.0	{0.1 Hz}	20.0	Speed-dependent switching threshold ● Threshold for automatic switching frequency reduction ● The controller changes automatically to 2 kHz when this value falls below the threshold	📖 8.2-25 📖 8.2-48
C0145 STOP	select ref	1				Selection of the flying restart mode ● Reference speed with which the flying restart process is started	📖 8.2-36 📖 8.2-65
			0	REF: C0011		Maximum speed	
			1	REF: N-ACT		Last current speed	
			2	REF: N-SET		Defined main speed setpoint It is referenced to the setpoint signal at input NSET-N of the function block NSET. If the setpoint signal at input NSET-N is missing, it is referenced to the active JOG setpoint (C0039/x)	
C0146	fly current	0	-500	{1}	500	Flying restart circuit, quantity of current during search process ● Influences the current injection during search process ● ±500 ≈ ±39 % of I_{max} ● The initial value amounts to ≈ 8 % of I_{max}	📖 8.2-36 📖 8.2-65
C0147	fly dt-f	0	-82	{1}	82	Flying restart circuit, search speed during flying restart process ● For drives with great centrifugal masses, reduce the search speed, if required ● ±82 ≙ ±5.0 Hz	

Code		Possible settings				IMPORTANT	
No.	Name	Lenze	Selection				
C0234	damp value	20	-100	{1 %}	100	Influence of the oscillation damping, function block MCTRL ● Minimising a tendency to oscillation of the drive ● Influences the tendency to oscillation of the drive ● When C0025 >1 and C0006 = 1, C0234 is set to 0	📖 8.2-25 📖 8.2-48
C0235	damping	5	1	{1 ms}	600	Filter time of the oscillation damping, function block MCTRL ● Filter time for the internal signal for oscillation damping	📖 8.2-25 📖 8.2-48
C0236	damp limit	0.2	0.0	{0.1 Hz}	20.0	Limit value of oscillation damping, function block MCTRL ● Limit value for the internal signal of oscillation damping	
C0890 STOP	CFG: N-SET	5050	NSET-NOUT		📖 Selection list 1	Configuration of analog input signal, function block MCTRL ● Speed setpoint	📖 8.2-25 📖 8.2-48
C0900 STOP	CFG: QSP	10250	R/L/Q-QSP		📖 Selection list 2	Configuration of digital input signal, function block MCTRL ● HIGH = drive performs quick stop	📖 8.2-25 📖 8.2-48
C0903 STOP	CFG: BOOST	5015	MCTRL-BOOST		📖 Selection list 1	Configuration of analog input signal, function block MCTRL ● Boost of the motor voltage	📖 8.2-25
C0904 STOP	CFG: DC-BREAK	1000	FIXED0		📖 Selection list 2	Configuration of digital input signal, function block MCTRL ● HIGH = Motor is braked	📖 8.2-25 📖 8.2-48
C0905	DIS: DC-BREAK		0		1	Function block MCTRL ● Display of the signal linked in C0904	
C0906			-199.99	{0.01 %}	199.99	Function block MCTRL ● Display of the signals linked in C0890, C0891, C0892, C0893, C0901 and C0903	📖 8.2-25 📖 8.2-48
1	DIS: N-SET						
2	DIS: M-ADD						
3	DIS: LO-M-LIM						
4	DIS: HI-M-LIM						
5	DIS: I-SET						
6	DIS: BOOST						
C0907			0		1	Function block MCTRL ● Display of the signals linked in C0899, C0900 and C0902	
1	reserved						
2	DIS: N/M-SWT						
3	DIS: QSP						
4	DIS: I-LOAD						
C0909	speed limit	1	1	+/- 175 %		Speed limitation, function block MCTRL ● Limitation of direction of rotation for the speed setpoint	📖 8.2-25 📖 8.2-48
			2	0 ... 175 %			
			3	-175 ... 0 %			
C0910 STOP	CFG: VP-ADAPT	1006	FIXED100%		📖 Selection list 1	Configuration of analog input signal, function block MCTRL ● Gain adaptation of the speed controller ● If the gain is varying, join to CURVE-OUT of FB CURVE	📖 8.2-25 📖 8.2-48
C0911	DIS: VP-ADAPT		-199.99	{0.01 %}	199.99	Function block MCTRL ● Display of the signal linked in C0910	

Code		Possible settings				IMPORTANT	
No.	Name	Lenze	Selection				
C0912	OV delay time	→	-	{1 ms}	-	Delay time of the pulse enable after an OU message → Depending on C0082, C0086, C0087, C0088, C0089, C0090, C0091, C0092 A change of one of the codes resets C0912 to the time of the selected motor ● The time is derived from the double rotor time constant	📖 8.2-25 📖 8.2-48 📖 9.4-3
C0913 STOP	OV handling	0				Value of the motor current during the flying restart process or after an OU message ● When C0913 = 1, the motor is driven with reduced current to the setpoint speed during the flying restart process of after an OU message. ● The setting is only effective for the drives EVF9326 ... EVF9333	📖 8.2-25 📖 8.2-48
			0	inactive	Non-reduced motor current		
			1	active	Reduced motor current		

Speed setpoint selection

► The signal at input MCTRL-N-SET is the speed setpoint in [%] and always refers to the maximum speed (C0011).

► In the most basic configurations, MCTRL-N-SET is connected with the function block NSET (speed setpoint conditioning).

– It is also possible to connect MCTRL-N-SET with any other analog output signal of an FB.

Speed setpoint limitation

► The speed setpoint at MCTRL-N-SET is always limited to ±100 % of the maximum speed n_{max} (C0011).

► The speed setpoint is converted into a frequency setpoint by the motor control and is limited to a maximum output frequency depending on the chopper frequency f_{chop}.

Chopper frequency f_{chop}	Maximum output frequency
16 kHz	600Hz
8 kHz	300Hz
2/4 kHz	150Hz

Setting of the V/f characteristic

The motor voltage characteristic is set via the input of the motor ratings.

Via the input MCTRL-BOOST the motor voltage can be raised. The input is connected to C0016 (freely configurable) in all basic configurations.

► To adapt the motor voltage boost to your application, you can also connect the input with other function blocks.

Speed control

With feedback operation, a PI controller will control the slip.

Activating the speed control

The speed control is activated when you select an incremental encoder in C0025.

Parameter setting

Code	Function
C0070	Gain V_p
C0071	Integral-action time T_n
C0074	Influence of the speed controller at operation with incremental encoder. Reference is n_{max} (C0011).

Note!

If the speed controller influence is adapted to the motor slip to be expected, the motor cannot accelerate in an uncontrolled way when the incremental encoder fails.

Adaptation of the speed controller

The gain of the speed controller can be changed online via the input MCTRL-VP-N-ADAPT. The set gain in C0070 is the reference value for an input signal of 100 %.

► You can influence the gain (C0070) by adapting a function block (e.g. CURVE) to MCTRL-VP-N-ADAPT.

► The adaptation is switched off in the Lenze default setting.

Limitation of the output current

The limitation of the output current is mainly used for the protection of the controller and the stabilisation of the control.

When the maximum permissible motor load is exceeded, you can adapt the max. output current of the controller accordingly.

Parameter setting

Code	Function
C0022	Maximum current in motor mode
C0023	Maximum current in generator mode

If you select a motor (via C0086), the maximum current of which is clearly lower than the output current of the controller, the maximum motor current (C0022) is limited automatically to 200% of the rated motor current.

Mode of operation

In the V/f characteristic control mode, a PI controller (V_p = C0075, T_n = C0076) prevents an excess of the max. permissible motor current by reducing (motor overload) or increasing (generator overload) of the output frequency.

The N controller is not active in the V/f characteristic control mode without feedback.

Consequences

- ► The motor cannot follow the speed setpoint.
- ► MCTRL-IMAX is set to HIGH
- ► When selecting the automatic switching frequency setting (C0018 = 0 or 6), the controller switches to a lower switching frequency so that a disconnection is not required.

Automatic speed detection after controller enable - flying restart circuit

The flying restart circuit is especially suitable for applications with fan and drives with great mass inertia.

The flying restart circuit serves to enable the controller although the motor still rotates. The flying restart circuit automatically detects the current motor speed using this speed to start the motor control. This prevents the motor from braking to zero speed with subsequent acceleration.

Use C0140 to determine the search direction during the flying restart process.

- ► If the direction of rotation of the coasting machine is known, you can search in the direction of rotation or in the direction of the applied setpoint.
- ► If the direction of rotation of the coasting machine is not known, you can search in both directions of rotation or in both directions of the applied setpoint.

  In case of applications with fan, for example, search is possible in both directions if the direction of rotation of the free-running fan impeller is not known due to the air flow.

Note!

- ► The flying restart circuit is optimised for a power-adapted motor. Thus, the rated motor current should not exceed the rated controller current.
- ► Although the flying restart circuit is activated (C0142 = 2 or C0142 = 3), the flying restart process does not start if the pulse inhibit is deactivated again after an OU message.

  In order to start the flying restart process, connect e.g. the input DCTRL-CINHx with the output signal MONIT-OU. An OU message causes an internal controller inhibit. When the controller inhibit is deactivated, the flying restart process is started.

Setting

Selection	Code	Description
Search direction during flying restart process	C0140 = 0	Lenze setting Only search in the direction of the applied setpoint
	C0140 = 1	Only search against the direction of the applied setpoint
	C0140 = 2	Only search in positive direction of rotation
	C0140 = 3	Only search in negative direction of rotation
	C0140 = 4	Search at first in the direction of the applied setpoint and then against the direction
	C0140 = 5	Search at first against the direction and then in the direction of the applied setpoint
	C0140 = 6	Search at first in positive then in negative direction of rotation
	C0140 = 7	Search at first in negative then in positive direction of rotation
Reference speed for starting the search process	C0145 = 0	Flying restart circuit referenced to the maximum speed (C0011). Recommended when the motor speed is unknown
	C0145 = 1	Lenze setting Flying restart circuit referenced to the last current motor speed
	C0145 = 2	Speed setpoint, recommended when motor speed is known
Value of current during search process	C0146	Influences the value of current during the search process. Reduce the value in case of motors with low centrifugal mass (speed already increases during search process).
Search speed	C0147	Influences the search speed. A search process takes approx. 1 ... 2 s. It may be required to reduce the search speed to achieve a successful search process (reduce value).

Activation

Selection	Code	Description
Start protection	C0142 = 0	The flying restart circuit is inactive. protection against unexpected start-up means that a restart requires signal change for enabling the controller (e. g. LOW-HIGH edge at X5/28).
Automatic start	C0142 = 1	Lenze setting Automatic start, flying restart circuit is inactive
Start after deactivating the switch-on inhibit	C0142 = 2	Flying restart circuit is started after resetting IMP (mains connection, cancel of messages, (t > 0.5 s) or TRIP RESET) and renewed controller enable (e. g. LOW-HIGH edge at X5/28)
Starting without protection against unexpected start-up	C0142 = 3	Flying restart circuit gets active immediately. No renewed controller enable required (e. g. LOW-HIGH edge at X5/28).

Flying restart circuit with protection against unexpected start-up (C0142 = 2):

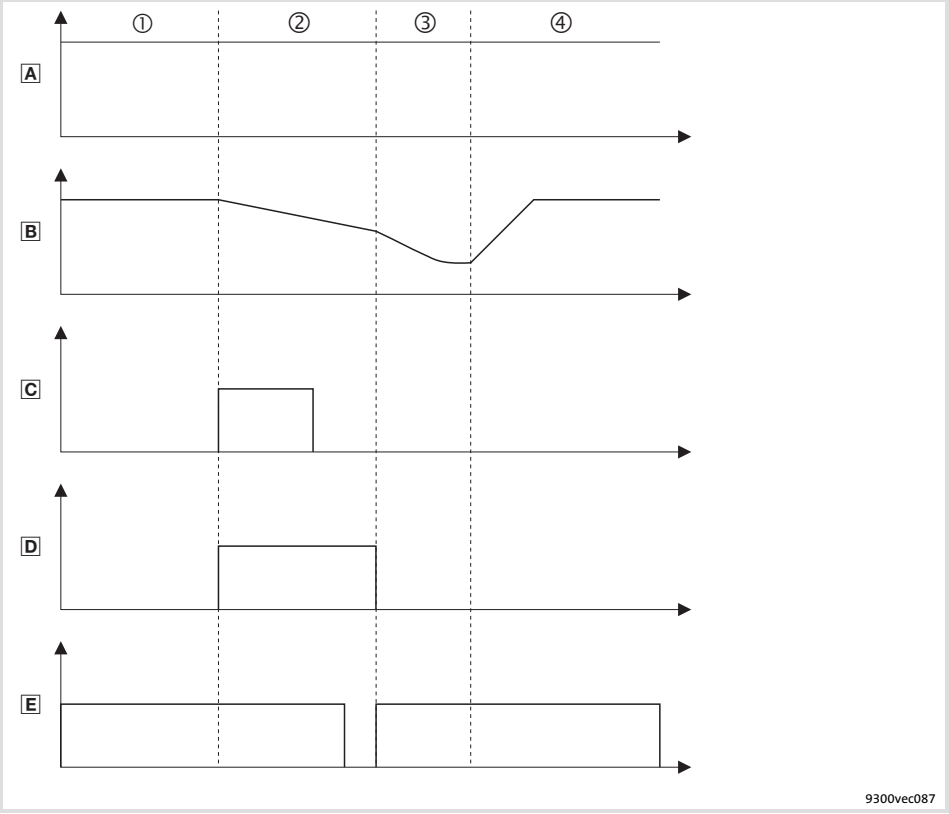

Fig. 8.2-16 Signal characteristic for manual start with flying restart circuit (C0142 = 2)

- A Speed setpoint (e.g. AIN-OUT)
- B Actual speed value
- C Fault (e.g. DCTRL-FAIL = HIGH)
- D Pulse inhibit (e.g. DCTRL-IMP = HIGH)
- E Enable controller (e.g. X5/28 = HIGH)
- ① The motor rotates with setpoint
- ② A fault (e.g. mains failure, TRIP SET) activates a pulse inhibit IMP . The motor coasts. After eliminating the fault (e.g. mains recovery, TRIP RESET) the pulse inhibit remains active until the controller is enabled again (e.g. LOW-HIGH edge at X5/28)
  Important in case of an OU message: if the OU message is not pending anymore, the pulse inhibit is deactivated.
- ③ The flying restart circuit is active now and determines the current motor speed
- ④ The motor is accelerated along the set acceleration ramp to the speed setpoint and is being kept there

Flying restart circuit without protection against unexpected start-up (C0142 = 3):

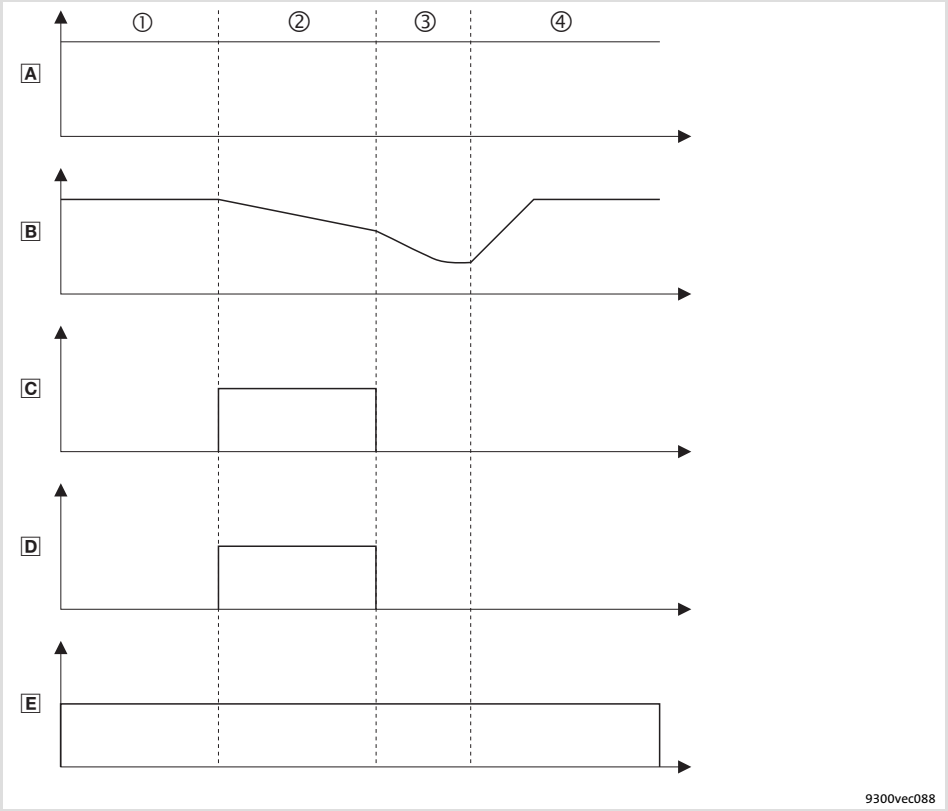

Fig. 8.2-17 Signal characteristic for automatic start with flying restart circuit (C0142 = 3)

- A Speed setpoint (e.g. AIN-OUT)
- B Actual speed value
- C Fault (e.g. DCTRL-FAIL = HIGH)
- D Pulse inhibit (e.g. DCTRL-IMP = HIGH)
- E Enable controller (e.g. X5/28 = HIGH)
- ① The motor rotates with setpoint
- ② A fault (e.g. mains failure, TRIP SET) activates a pulse inhibit IMP. The motor coasts. After eliminating the fault (e.g. mains recovery, TRIP RESET) the pulse inhibit is deactivated.
- ③ The flying restart circuit is active now and calculates the current motor speed. If, after an OU message, the pulse inhibit is deactivated again, the flying restart circuit is not started.
- ④ The motor is accelerated along the set acceleration ramp to the speed setpoint and is being kept there

Quick stop (QSP)

After a signal request, the motor is decelerated to standstill when an internal ramp function generator has been activated.

Mode of operation

► Quick stop is active
- MCTRL-QSP = HIGH
- The control word DCTRL-QSP is applied
- DC injection braking (GSB) is not active (GSB has priority over quick stop)

► If quick stop is active, the motor brakes to standstill with the deceleration time set in C0105. MCTRL-QSP-OUT is set to HIGH.

Manual DC injection braking

- ► After a signal, the motor is braked by injecting a DC current.
- ► Braking in generator mode must be used for controlled brake ramps.
- ► The hold time (C0107) has no influence. The motor remains braked until MCTRL-GSB is set to LOW.

Note!
Manual DC injection braking has priority over quick stop.

Setting

Selection	Code	Description
DC braking current	C0036	DC braking current with which the motor is braked

Stop!
An excessive DC braking current and braking time can thermally overload the motor. Special care must be taken when using self-ventilated motors.

Activation

The input MCTRL-GSB in the function block MCTRL is triggered with HIGH level.

- ► MCTRL-GSB = HIGH: Function is activated
- ► MCTRL-GSB = LOW: Function is not activated

Function procedure

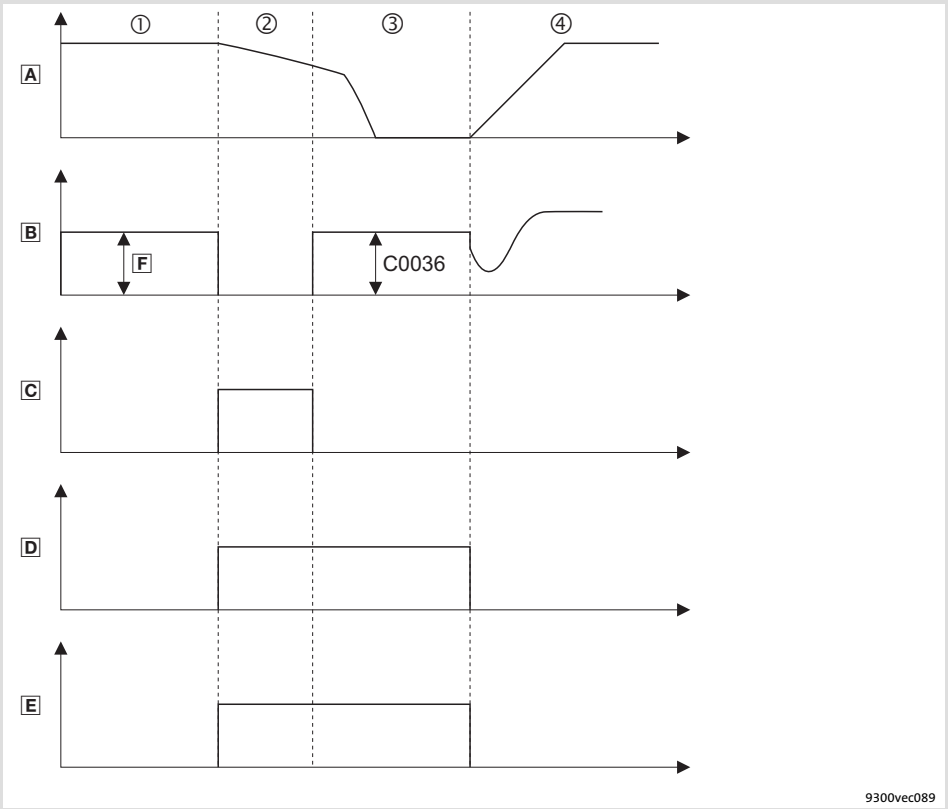

Fig. 8.2-18 Signal sequence with DC injection braking

- A Actual speed value of the motor (e. g. MCTRL-NACT)
- B Controller output current (e. g. MCTRL-IACT)
- C Pulse inhibit (e. g. DCTRL-IMP)
- D Activating DC injection braking (MCTRL-GSB)
- E DC injection braking is active (MCTRL-GSB-OUT)
  MCTRL-GSB-OUT = HIGH: Function is active
  MCTRL-GSB-OUT = LOW: Function is not active
- ① The motor rotates with the preset speed. The current adjusts itself as a function of the load F.
- ② DC injection braking is activated with MCTRL-GSB = HIGH. Pulse inhibit IMP is set. The motor coasts.
- ③ The pulse inhibit is deactivated and the DC braking current set in C0036 is injected
- ④ DC injection braking is deactivated with MCTRL-GSB = LOW
  The motor is accelerated to speed setpoint at the set acceleration ramp and is kept there.

Automatic DC injection braking

When the speed falls below a settable speed setpoint threshold, the function ”DC injection braking” is activated.

Note!
Automatic DC-injection braking has priority over quick stop.

Setting

Selection	Code	Description
DC braking current	C0036	DC braking current with which the motor is braked
Speed setpoint threshold	C0019	If the values fall below the threshold, DC-injection braking is released
Hold time	C0107	Duration of DC-injection braking. After the hold time, pulse inhibit is set.

Stop!
An excessive DC braking current and braking time can thermally overload the motor. Special care must be taken when using self-ventilated motors.

Function procedure

Automatic DC injection braking provides two function procedures, each with a different reaction of the controller. The parameter setting is identical for both function procedures.

Function procedure 1:

► After the hold time has elapsed (C0107), the controller automatically sets pulse inhibit IMP.

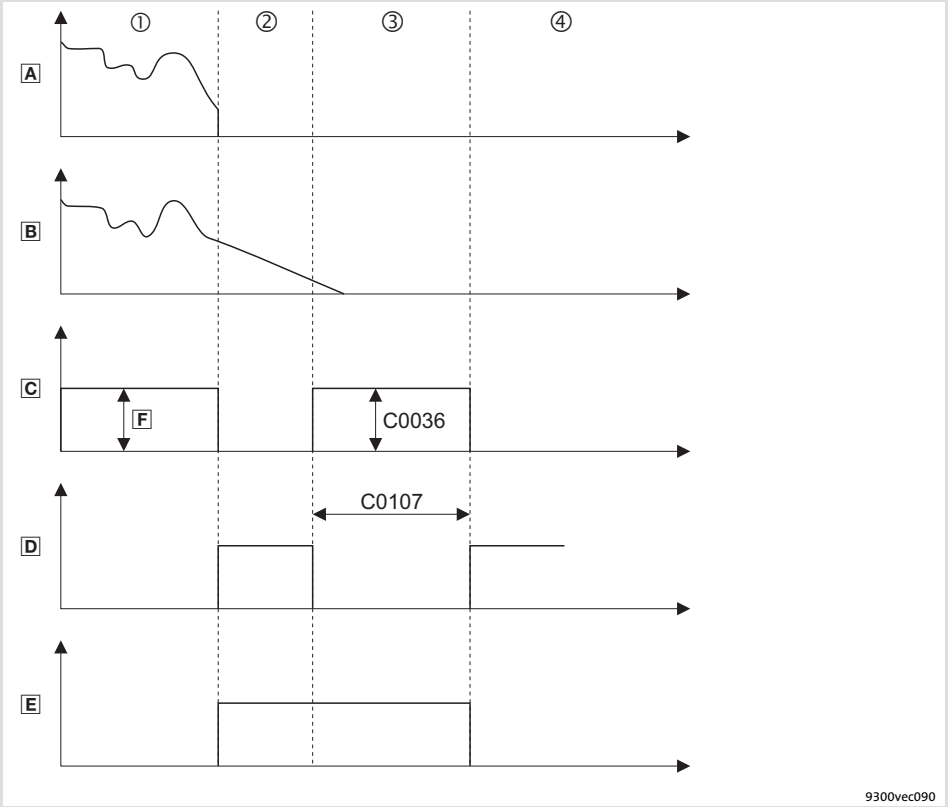

Fig. 8.2-19 Signal characteristic with automatic DC injection braking

- A Speed setpoint (e. g. AIN-OUT)
- B Actual speed value of the motor (e. g. MCTRL-NACT)
- C Controller output current (e. g. MCTRL-IACT)
- D Pulse inhibit (e. g. DCTRL-IMP)
- E DC injection braking is active (MCTRL-GSB-OUT)
  MCTRL-GSB-OUT = HIGH: Function is active
  MCTRL-GSB-OUT = LOW: Function is not active
- ① The motor rotates with the preset speed. The current adjusts itself as a function of the load F.
- ② With a speed setpoint < speed threshold (C0019), DC injection braking is activated. Pulse inhibit IMP is set. The motor coasts.
- ③ The pulse inhibit is deactivated and the DC braking current set in C0036 is injected
- ④ After the hold time (C0107) pulse inhibit IMP is set

Function procedure 2:

► If you define a speed setpoint > speed threshold (C0019) before the hold time elapses, DC-injection braking is deactivated and the drive follows the speed setpoint. If the speed falls below the threshold again, DC-injection braking is reactivated and the hold time is restarted.

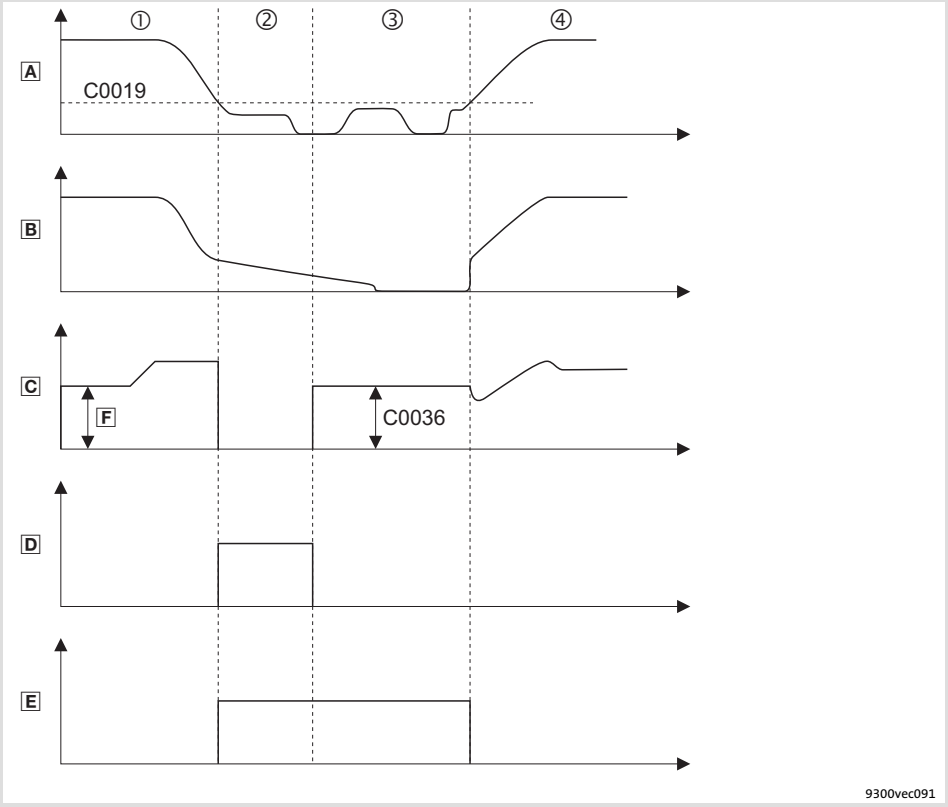

Fig. 8.2-20 Signal characteristic with automatic DC injection braking

- A Speed setpoint (e. g. AIN-OUT)
- B Actual speed value of the motor (e. g. MCTRL-NACT)
- C Controller output current (e. g. MCTRL-IACT)
- D Pulse inhibit (e. g. DCTRL-IMP)
- E DC injection braking is active (MCTRL-GSB-OUT)
  MCTRL-GSB-OUT = HIGH: Function is active
  MCTRL-GSB-OUT = LOW: Function is not active
- ① The motor rotates with the preset speed. The current adjusts itself as a function of the load F.
- ② With a speed setpoint < speed threshold (C0019), DC injection braking is activated. Pulse inhibit IMP is set. The motor coasts.
- ③ The pulse inhibit is deactivated and the DC braking current set in C0036 is injected
- ④ DC-injection braking is deactivated as soon as the speed setpoint exceeds the speed threshold (C0019). The motor is accelerated to the defined speed setpoint and kept there.

Oscillation damping

Suppressing no-load oscillations in case of:

► Drives with different rated power of controller and motor, e. g. when operating with high switching frequency and the power derating involved.

► Operation of higher-pole motors.

► Operation of three-phase AC drives > 10 kW.

Compensation of resonances in the drive kit:

► Certain asynchronous motors may show this behaviour above $^1/_3$ of the rated speed ($^1/_3 \cdot n_n$). This may result in an unstable operation (current and speed variations).

Adjustment

The Lenze setting is designed for power-adapted motors.

Usually, the speed oscillations can be reduced by changing the Lenze setting of the codes C0234 oder C0236 by the factor 2 ... 5.

1. Approach the range with speed oscillations.
2. Change the influence of the oscillation damping in C0234 (generally, increase it).
3. Increase the limitation of the oscillation damping in C0236.
4. Change filter time in C0235 in the range of 1 ... 20 ms, if necessary.

► These can be indicators for smooth running:
  – Constant motor current characteristic
  – Reduction of the mechanical oscillations in the bearing seat

Slip compensation

The speed of an asynchronous machine decreases when being loaded. This load-dependent speed drop is called slip. By setting C0021 the slip can be partly compensated.

In the V/f characteristic control mode the slip compensation is only active at operation without feedback (C0025 = 1).

V/f characteristic control

The slip compensation (C0021) is automatically calculated from the rated motor speed (C0087) and the rated motor frequency (C0089). The entered slip constant [%] is the rated slip of the motor in [%] relating to the synchronous speed of the motor.

► Calculating the slip compensation and entering it into C0021:

$s = \frac{n_{rsyn} - n_r}{n_{rsyn}} \cdot 100\ \%$	E	Slip constant (C0021) [%]
	n_{rsyn}	Synchronous motor speed [min^{-1}]
$n_{rsyn} = \frac{f_r \cdot 60}{p}$	n_r	Rated motor speed according to motor nameplate [min^{-1}]
	f_r	Rated motor frequency according to motor nameplate [Hz]
	p	Number of motor pole pairs (1, 2, 3, ...)

► If required, the slip compensation can be adapted manually:
- If C0021 is set too high, the drive may get unstable.
- With cyclic load impulses (e. g. centrifugal pump) a smooth motor characteristic is achieved by smaller values in C0021 (possibly negative values)
- Parameterise C0078 (filter time for the slip compensation) if you want to change the motor response time to load changes (dynamic ↔ slow).

► The actual speed is output as an analog signal (in [%] of n_{max} (C0011)) to MCTRL-NACT.

Note!

When operating synchronous or reluctance motors, C0021 must be set to 0.

Inhibiting the direction of rotation

If the motor may only rotate in one direction, you can limit the output voltage generation to one direction of rotation via C0909.

Code	Description
C0909 = 1	The motor rotates in both directions
C0909 = 2	Motor rotates clockwise, ”positive direction of rotation” (View of the motor shaft)
C0909 = 3	Motor rotates counter-clockwise, ”negative direction of rotation” (View of the motor shaft)

8.2.7 Internal motor control with vector control (MCTRL2)

Description

The function block MCTRL2 controls the motor. Since it is always executed, it does not need to be entered into the processing table.

Compared with the V/f characteristic control the vector control (C0006 = 1) has a much higher torque efficiency at the same motor current. The motor is monitored and controlled via an internal motor model. This serves to achieve an optimum operating behaviour of the motor at any time.

The vector control can be used for single drives, asynchronous motors and multi-motor drives of the same type with rigid coupling.

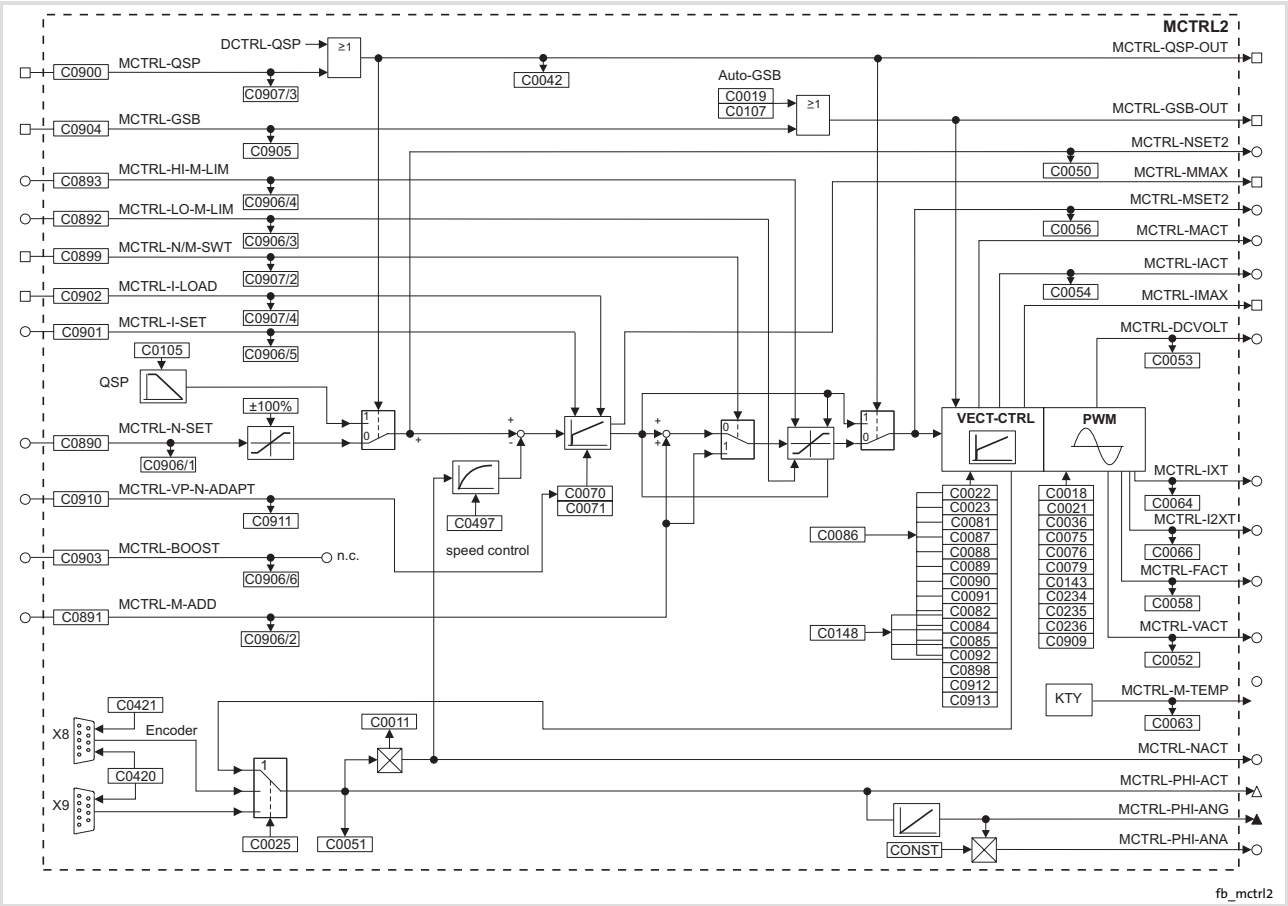

Fig. 8.2-21 Internal motor control with vector control (MCTRL2)

Codes for parameter setting

Code		Possible settings					IMPORTANT		
No.	Name	Lenze	Selection						
C0006 STOP	Op mode	5					Selection of the operating mode for the motor control		
			1	vector ctrl	Vector control without or with speed feedback		**In case of the first selection enter the motor data and identify them with C0148.**		📖 6.8-8
			5	V / f	V/f characteristic control		Commissioning without identification of the motor data is possible ● Advantage of identification with C0148: Improved smooth running at low speeds		📖 6.8-4
C0010	N_{min}	0	0	{1 rpm}		36000	● Reference value for the absolute and relative setpoint selection for the acceleration and deceleration times ● C0059 must be set correctly ● Set C0010 < C0011 ● C0010 is only effective in case of analog setpoint selection via AIN1 **Important: For parameter setting via interface, major changes in one step should only be made when the controller is inhibited.**	Minimum speed	📖 6.10-1
C0011	N_{max}	3000	0	{1 rpm}		36000		Maximum speed	
C0018	fchop	6					Switching frequency of the inverter ● General rule: the lower the switching frequency the – lower the power loss – higher the noise generation – better the concentricity factor – Observe derating information at high switching frequencies ● The max. output frequency (f_{out}) amounts to: – f_{chop} = 16 kHz ⇒f_{out} = 600 Hz – f_{chop} = 8 kHz ⇒f_{out} = 300 Hz – f_{chop} = 4 kHz ⇒f_{out} = 150 Hz – f_{chop} = 2 kHz ⇒f_{out} = 150 Hz		📖 6.9-1
			0	auto chop	automatic change-over of the switching frequency between 16/8/2 kHz				
			1	2 kHz sin	optimised smooth running				
			2	4 kHz f_top	power-optimised				
			3	8 kHz f_top	power-optimised				
			4	8 kHz sin	noise optimised				
			5	16 kHz sin	noise optimised				
			6	auto 8/2 kHz	noise / power-optimised with automatic change-over to low switching frequency				
C0019	Thresh nact=0	0	-36000	{1 rpm}		36000	Operating threshold - automatic DC injection brake (Auto-GSB) ● Falling below the threshold in C0019 activates automatic DC injection braking when the holding time set under C0107 > 0		📖 8.2-25 📖 8.2-48

Code		Possible settings				IMPORTANT	
No.	Name	Lenze	Selection				
C0021	slipcomp	→	-20.00	{0.01 %}	20.00	Slip compensation → Change of C0086, C0087 or C0089 sets C0021 to the calculated rated slip of the motor ● When changing over to the vector control mode, C0021 is set to 0	📖 6.11-1 📖 8.2-25 📖 8.2-48
C0022	IMAX CURRENT	→	0	{0.01 A}	-	I_{max} limit in motor mode → Depending on C0086	📖 6.6-13
C0023	Imax gen.	→	0	{0.01 A}	-	I_{max} limit in generator mode → Depending on C0086	📖 6.6-13
C0025 STOP	Feedback type	1				Speed feedback	📖 6.7-1
			1	no feedback	No feedback		
			100	IT (C420) - X8	Input of the number of increments in C0420	Incremental encoder at X8 ● Incremental encoders with TTL level can only be connected to X8.	
			101	IT (C420) - X9	Input of the number of increments in C0420	Incremental encoder at X9 ● Connect incremental encoders with HTL-level on X9 only	
					Number of increments:	Incremental encoder at X8 ● Incremental encoders with TTL level can only be connected to X8.	
			110	IT512-5V	512 inc		
			111	IT1024-5V	1024 inc		
			112	IT2048-5V	2048 inc		
			113	IT4096-5V	4096 inc		
C0036	DC brk value	0.0	0.0	{0.1 A}	-	Set DC braking current → depends on the controller	📖 8.2-25 📖 8.2-48
C0042	DIS: QSP					Quick stop ● Display only	📖 8.2-25 📖 8.2-48
			0	QSP inactive		Quick stop is not active	
			1	QSP active		Quick stop is active	
C0050	MCTRL-NSET2		-100.00	{0.01 %}	100.00	Speed setpoint, function block MCTRL ● Display of the speed in [%] of C0011	📖 8.2-25 📖 8.2-48
C0051	MCTRL-NACT		-36000	{1 rpm}	36000	Actual speed value, function block MCTRL ● Read only	📖 8.2-25 📖 8.2-48
C0052	MCTRL-Umot		0	{1 V}	800	Motor voltage, function block MCTRL ● Read only ● MCTRL-VACT = 100 % = C0090	📖 8.2-25 📖 8.2-48
C0053	UG-VOLTAGE		0	{1 V}	900	DC-bus voltage, function block MCTRL ● Read only ● MCTRL-DCVOLT = 100 % = 1000 V	📖 8.2-25 📖 8.2-48
C0054	IMot		0.0	{0.1 A}	500.0	Current motor current, function block MCTRL ● Read only ● MCTRL-IACT = 100 % = C0022	📖 8.2-25 📖 8.2-48

Code		Possible settings				IMPORTANT	
No.	Name	Lenze	Selection				
C0056	MCTRL-MSET2		-100.00	{0.01 %}	100.00	Read only. The output signal depends on the operating mode: ● Current motor current in case of V/f characteristic control, function block MCTRL1 ● Torque setpoint in case of vector control, function block MCTRL2	📖 8.2-25 📖 8.2-48
C0058	MCTRL-FACT		-600.0	{0.1 Hz}	600.0	Output frequency ● Display only ● MCTRL-FACT = 100.0 % = 1000.0 Hz	📖 8.2-25 📖 8.2-48
C0063	Mot temp		0	{1 °C}	200	Motor temperature ● Read only ● Monitoring of the motor temperature must be activated. ● KTY at X8/5, X8/8: – At 150 °C, TRIP OH3 is set – Early warning is possible via OH7, temperature is set in C0121 ● PTC, thermal contact at T1, T2: – Release sets TRIP or warning OH8	📖 8.2-25 📖 8.2-48
C0064	Utilization		0	{1 %}	150	Device utilisation I×t ● Read only ● Device utilisation during the last 180 s of operating time ● C0064 > 100 % releases warning OC5 ● C0064 > 140 % limits the output current of the controller to 67 % of the maximum current in C0022	📖 8.2-25 📖 8.2-48
C0066	MOTOR LOAD		0	{1 %}	250	Motor load I^2×t	📖 8.2-25 📖 8.2-48
C0070	Vp speed CTRL	10.0	0.0	{0.1 }	255.9	Gain of speed controller	📖 8.2-25 📖 8.2-48
C0071	Tn speed CTRL	50	1	{1 ms}	6000	Integral-action time of speed controller C0071 = 6000 ms: No integral-action time	
C0075	Vp curr CTRL	0.20	0.00	{0.01 }	0.99	Gain of current controller ● Vector control: gain of current controller ● V/f characteristic control: maximum current controller	📖 8.2-25 📖 8.2-48
C0076	Tn curr CTRL	10.0	0.1	{0.1 ms}	2000.0	Integral-action time of current controller ● Vector control: integral-action time of current controller ● V/f characteristic control: maximum current controller ● C0076 = 2000 ms: current controller is switched off	📖 8.2-25 📖 8.2-48

Code		Possible settings				IMPORTANT	
No.	Name	Lenze	Selection				
C0079	Adapt I-CTRL	100.00	10.00	{0.01 %}	100.00	Adaption of the current controller ● Evaluation for the reset time T_{ni} of the current controller ● Effective for setpoint = 0 ● Is increased automatically to 100 % up to rated speed ● C0079 = 100 %: no adaption of the reset time ● C0079 < 100 %: – evaluation of the reset time:	📖 8.2-25 📖 8.2-48
C0082 STOP	Mot Rr	→	0.000	{0.001 Ω}	65.000	Motor rotor resistance → Value is evaluated by motor parameter identification from C0087, C0088, C0089, C0090 and C0091 ● Selection of a motor in C0086 sets the corresponding rotor resistance value	📖 6.6-1 📖 6.6-14
C0084 STOP	Mot Rs	→	0.00	{0.01 mΩ}	100000.00	Motor stator resistance → Value is determined by motor parameter identification (C0148, C0149)	📖 6.6-1 📖 6.6-14
C0085 STOP	Mot Lss	→	0.0	{0.1 mH}	6500.0	Motor leakage inductance → Value is evaluated by motor parameter identification (C0148, C0149)	📖 6.6-1 📖 6.6-14
C0086 STOP	Mot type	→	📖 Motor selection list			Motor type selection → depending on the controller used ● Motor selection in C0086 sets the corresponding parameters in C0021, C0022, C0081, C0087, C0088, C0089, C0090, C0091	📖 6.6-1
C0087 STOP	Mot speed	→	50	{1 rpm}	36000	Rated motor speed → depending on C0086 ● Motor selection in C0086 set the corresponding rated motor speed in C0087 ● Change of C0087 sets C0086 = 0	📖 6.6-1
C0088 STOP	MOT CURRENT	→	0.5	{0.1 A}	500.0	Rated motor current → Depending on C0086 ● Selection of a motor in C0086 sets the corresponding rated motor current in C0088 ● Change of C0088 sets C0086 = 0	📖 6.6-1
C0089 STOP	Mot frequency	→	10	{1 Hz}	5000	Rated motor frequency → depending on C0086 ● Motor selection in C0086 sets the corresponding rated motor frequency in C0089 ● Change of C0089 sets C0086 = 0	📖 6.6-1
C0090 STOP	Mot voltage	→	0	{1 V}	1000	Rated motor voltage → depending on C0086 ● Motor selection in C0086 sets the corresponding rated motor voltage in C0090 ● Change of C0090 sets C0086 = 0	📖 6.6-1

Code		Possible settings				IMPORTANT	
No.	Name	Lenze	Selection				
C0091 STOP	Mot cos phi	→	0.50	{0.01 }	1.00	Motor cos φ → depending on C0086 ● Motor selection in C0086 sets the corresponding motor cos φ in C0091 ● Change of C0091 sets C0086 = 0	📖 6.6-1
C0092 STOP	Mot Ls	→	0.0	{0.1 mH}	6500.0	Motor stator inductance → Value is evaluated by motor parameter identification from C0088, C0089, C0090 and C0091 → Selection of a motor in C0086 sets the corresponding stator inductance value in C0092	📖 6.6-1
C0095 STOP	Mot Io	→	0.00	{0.01 A}	1000.00	Motor magnetising current → depending on C0086, C0088 and C0091 ● Change of C0086, C0088 and C0091 sets C0095 to the Lenze setting ● Change of C0095 sets C0086 = 0	📖 6.6-1 📖 6.11-5
C0105	QSP Tif	5.00	0.00	{0.01 s}	999.90	Quick stop deceleration time ● The deceleration time refers to a speed variation of C0011 ... 0	📖 8.2-25 📖 8.2-48
C0107	holding time	0.00	0.00	{0.01 s}	9999.90	Hold time for automatic DC injection braking (Auto-GSB)	📖 8.2-25 📖 8.2-48
C0132 STOP	Controller enable fly delay	→	0	{1 ms}	9999	Minimum time for controller inhibit with active flying restart circuit, delays the start of the flying restart process after controller enable → depending on C0082, C0086, C0087, C0088, C0089, C0090, C0091, C0092 A change of one of the codes resets C0132 to the minimum time of the selected motor ● The time is derived from the double rotor time constant	📖 8.2-25 📖 8.2-48

Code		Possible settings		IMPORTANT	
No.	Name	Lenze	Selection		
C0140 STOP	select direct	0		Search direction during flying restart process ● Positive direction of rotation: The motor rotates in CW direction with view on the motor shaft ● Negative direction of rotation: The motor rotates in CCW direction with view on the motor shaft	📖 8.2-25 📖 8.2-48
			0 NSET	Only search in the direction of the applied setpoint	
			1 inv. Nset	Only search against the direction of the applied setpoint	
			2 pos.	Only search in positive direction of rotation	
			3 neg.	Only search in negative direction of rotation	
			4 Both, Nset	Search at first in the direction of the applied setpoint and then against the direction	
			5 Both, inv. Nset	Search at first against the direction and then in the direction of the applied setpoint	
			6 Both pos.	Search at first in positive then in negative direction of rotation	
			7 Both neg.	Search at first in negative then in positive direction of rotation	
C0142	Start options	1		Starting condition for the flying restart circuit	📖 8.2-36 📖 8.2-65
			0 Start lock	● Automatic start is inhibited after – mains connection – Cancel of a message (t > 0.5 s) – Trip reset ● Flying restart circuit is inactive ● Start after HIGH-LOW-HIGH level change at X5/28	
			1 Auto start	Automatic start when X5/28 = HIGH ● Flying restart circuit is inactive	
			2 flying lock	● Automatic start is inhibited after – mains connection – Cancel of a message (t > 0.5 s) – Trip reset ● Flying restart circuit is active ● Start after HIGH-LOW-HIGH level change at X5/28	
			3 Fly restart	Automatic start when X5/28 = HIGH ● Flying restart circuit is active	

Code		Possible settings				IMPORTANT	
No.	Name	Lenze	Selection				
C0143	limit 2 kHz	0.0	0.0	{0.1 Hz}	20.0	Speed-dependent switching threshold ● Threshold for automatic switching frequency reduction ● The controller changes automatically to 2 kHz when this value falls below the threshold	📖 8.2-25 📖 8.2-48
C0145 STOP	select ref	1				Selection of the flying restart mode ● Reference speed with which the flying restart process is started	📖 8.2-36 📖 8.2-65
			0	REF: C0011		Maximum speed	
			1	REF: N-ACT		Last current speed	
			2	REF: N-SET		Defined main speed setpoint It is referenced to the setpoint signal at input NSET-N of the function block NSET. If the setpoint signal at input NSET-N is missing, it is referenced to the active JOG setpoint (C0039/x)	
C0146	fly current	0	-500	{1}	500	Flying restart circuit, quantity of current during search process ● Influences the current injection during search process ● ±500 ≈ ±39 % of I_{max} ● The initial value amounts to ≈ 8 % of I_{max}	📖 8.2-36 📖 8.2-65
C0147	fly dt-f	0	-82	{1}	82	Flying restart circuit, search speed during flying restart process ● For drives with great centrifugal masses, reduce the search speed, if required ● ±82 ≙ ±5.0 Hz	
C0148 STOP	ident run	0	0	WRK stop Ready		Motor data identification 1. Inhibit controller, wait until drive has stopped 2. Enter the correct values of the motor nameplate into C0087, C0088, C0089, C0090, C0091 3. Set C0148 = 1, confirm with ENTER 4. Enable controller The identification – starts, IMP goes off. The motor "whistles" but does not rotate! – lasts approx. 1 ... 2 min – is completed when IMP is lit again 5. Inhibit controller:	📖 6.6-14
			1	WRK run Start identification			
C0234	damp value	20	-100	{1 %}	100	Influence of the oscillation damping, function block MCTRL ● Minimising a tendency to oscillation of the drive ● Influences the tendency to oscillation of the drive ● When C0025 >1 and C0006 = 1, C0234 is set to 0	📖 8.2-25 📖 8.2-48

Code		Possible settings				IMPORTANT	
No.	Name	Lenze	Selection				
C0235	damping	5	1	{1 ms}	600	Filter time of the oscillation damping, function block MCTRL ● Filter time for the internal signal for oscillation damping	📖 8.2-25 📖 8.2-48
C0236	damp limit	0.2	0.0	{0.1 Hz}	20.0	Limit value of oscillation damping, function block MCTRL ● Limit value for the internal signal of oscillation damping	
C0420 STOP	Encoder const	512	1	{1 inc/rev}	8192	Number of increments for incremental encoder at X8 or X9 ● Connect incremental encoders with HTL-level on X9 only	📖 6.7-1
C0421 STOP	Enc voltage	5.00	5.00	{0.1 V}	8.00	Supply voltage for the incremental encoder at X8 **CAUTION! A wrong entry can destroy the incremental encoder!**	
C0497	Nact filter	2.0	0.0	{0.1 ms}	50.0	Filter time constant N_{act} for actual speed value, function block MCTRL2 ● Internal filtering of the speed signal for control ● C0497 = 0 ms: Switched off	📖 8.2-48
C0890 STOP	CFG: N-SET	5050	NSET-NOUT		📖 Selection list 1	Configuration of analog input signal, function block MCTRL ● Speed setpoint	📖 8.2-25 📖 8.2-48
C0891 STOP	CFG: M-Add	1000	FIXED0%		📖 Selection list 1	Configuration of analog input signal, function block MCTRL ● Additional torque setpoint or torque setpoint	📖 8.2-48
C0892 STOP	CFG: Lo-M-LIM	5700	ANEG1-OUT		📖 Selection list 1	Configuration of analog input signal, function block MCTRL ● Lower torque limit in [%] of C0057	
C0893 STOP	CFG: HI-M-LIM	19523	FCODE-472/3		📖 Selection list 1	Configuration of analog input signal, function block MCTRL ● Upper torque limit in [%] of C0057	
C0898 STOP	CFG: M-LIM switch	0	0	M-LIM ON	Reduced torque limit is active	Torque limitation in the field weakening range, function block MCTRL ● If the torque limit is reduced, the maximum possible torque in the field weakening range is lowered with 1/f. This provides a higher motor stability in the field weakening range	📖 8.2-48
			1	M-LIM OFF	Reduced torque limit is inactive		
C0899 STOP	CFG: N/M-SWT	1000	FIXED0		📖 Selection list 2	Configuration of digital input signal, function block MCTRL ● LOW = active speed control ● HIGH = active torque control	📖 8.2-48
C0900 STOP	CFG: QSP	10250	R/L/Q-QSP		📖 Selection list 2	Configuration of digital input signal, function block MCTRL ● HIGH = drive performs quick stop	📖 8.2-25 📖 8.2-48

Code		Possible settings				IMPORTANT	
No.	Name	Lenze	Selection				
C0901 STOP	CFG: I-SET	1000	FIXED0%		📖 Selection list 1	Configuration of analog input signal, function block MCTRL ● Setting of integral action component of the speed controller	📖 8.2-48
C0902 STOP	CFG: I-LOAD	1000	FIXED0		📖 Selection list 2	Configuration of digital input signal, function block MCTRL ● HIGH = the integral action component at MCTRL-I-SET is accepted by the speed controller	
C0904 STOP	CFG: DC-BREAK	1000	FIXED0		📖 Selection list 2	Configuration of digital input signal, function block MCTRL ● HIGH = Motor is braked	📖 8.2-25 📖 8.2-48
C0905	DIS: DC-BREAK		0		1	Function block MCTRL ● Display of the signal linked in C0904	
C0906			-199.99	{0.01 %}	199.99	Function block MCTRL ● Display of the signals linked in C0890, C0891, C0892, C0893, C0901 and C0903	📖 8.2-25 📖 8.2-48
1	DIS: N-SET						
2	DIS: M-ADD						
3	DIS: LO-M-LIM						
4	DIS: HI-M-LIM						
5	DIS: I-SET						
6	DIS: BOOST						
C0907			0		1	Function block MCTRL ● Display of the signals linked in C0899, C0900 and C0902	
1	reserved						
2	DIS: N/M-SWT						
3	DIS: QSP						
4	DIS: I-LOAD						
C0909	speed limit	1	1	+/- 175 %		Speed limitation, function block MCTRL ● Limitation of direction of rotation for the speed setpoint	📖 8.2-25 📖 8.2-48
			2	0 ... 175 %			
			3	-175 ... 0 %			
C0910 STOP	CFG: VP-ADAPT	1006	FIXED100%		📖 Selection list 1	Configuration of analog input signal, function block MCTRL ● Gain adaptation of the speed controller ● If the gain is varying, join to CURVE-OUT of FB CURVE	📖 8.2-25 📖 8.2-48
C0911	DIS: VP-ADAPT		-199.99	{0.01 %}	199.99	Function block MCTRL ● Display of the signal linked in C0910	
C0912	OV delay time	→	-	{1 ms}	-	Delay time of the pulse enable after an OU message → Depending on C0082, C0086, C0087, C0088, C0089, C0090, C0091, C0092 A change of one of the codes resets C0912 to the time of the selected motor ● The time is derived from the double rotor time constant	📖 8.2-25 📖 8.2-48 📖 9.4-3

Code		Possible settings				IMPORTANT	
No.	Name	Lenze	Selection				
C0913 STOP	OV handling	0				Value of the motor current during the flying restart process or after an OU message ● When C0913 = 1, the motor is driven with reduced current to the setpoint speed during the flying restart process of after an OU message. ● The setting is only effective for the drives EVF9326 ... EVF9333	📖 8.2-25 📖 8.2-48
			0	inactive	Non-reduced motor current		
			1	active	Reduced motor current		

Speed setpoint selection

► The signal at input MCTRL-N-SET is the speed setpoint in [%] and always refers to the maximum speed (C0011).

► In the most basic configurations, MCTRL-N-SET is connected with the function block NSET (speed setpoint conditioning).

– It is also possible to connect MCTRL-N-SET with any other analog output signal of an FB.

Speed setpoint limitation

► The speed setpoint at MCTRL-N-SET is always limited to ±100 % of the maximum speed n_{max} (C0011).

► The speed setpoint is converted into a frequency setpoint by the motor control and is limited to a maximum output frequency depending on the chopper frequency f_{chop}.

Chopper frequency f_{chop}	Maximum output frequency
16 kHz	600Hz
8 kHz	300Hz
2/4 kHz	150Hz

Speed control

A PI controller compares the speed setpoint with the actual speed of the motor model and creates a torque setpoint from the speed variation.

► the actual speed is output as an analog signal (in [%] of n_{max} (C0011)) to MCTRL-NACT.

Parameter setting

Code	Function
C0070	Gain V_p
C0071	Integral-action time T_n

Operation with speed feedback

To change over to operation with external speed feedback, the incremental encoder must be selected via C0025. The external speed feedback serves to operate the motor in all of the four torque/speed quadrants.

Adaptation of the speed controller

Use the input MCTRL-VP-N-ADAPT to change the gain of the speed controller online. The set gain in C0070 is the reference value for an input signal of 100 %.

► By adapting a function block (e.g. CURVE) to MCTRL-VP-N-ADAPT you can influence the gain (C0070).

► In the Lenze setting the adaptation is deactivated.

Behaviour when speed setpoint = 0

If the speed setpoint = 0 (MCTRL-N-SET = 0) and actual speed value ≈ 0 (MCTRL-NACT ≈ 0), the speed controller is switched off. The motor merely receives its magnetising current.

Behaviour in braking operation at very low speed

Stop!

A longer-lasting braking operation with very low speed can lead to an unstable vector control. Remedy:

► Passing through the critical speed range more quickly.

► Using speed feedback.

Temperature detection

For motors with temperature detection (KTY83-110) the controller can consider temperature changes in its motor model. The accuracy and stability of the vector control are improved considerably.

► Sensor connection:
– X8/5 = -KTY (rt/ws/bl)
– X8/8 = +KTY (br/gr/sw)

Note!
You can also use the thermal sensor (KTY) without speed feedback.

► When monitoring SD6 (C0594) is activated, temperature feedback is activated at the same time.

► First, activate the temperature feedback and then start the motor identification to consider the motor temperature.

► In addition, you can activate and parameterise the monitoring functions OH3 (C0583) and OH7 (C0584).

► The current motor temperature can be displayed via C0063.

Setting integral action component

To initialise the speed controller with a starting torque, the integral action component of the speed controller can be described via MCTRL-I-SET (starting value) and MCTRL-I-LOAD (control signal).

Input signal	Effect
MCTRL-I-LOAD = HIGH	● The speed controller transmits the value at MCTRL-I-SET to its integral action component ● The P component is switched off
MCTRL-I-LOAD = LOW	The speed controller is active

Torque limitation in the field weakening range

The function is suitable for applications which also require a constant torque in the field weakening range.

► With quick stop (QSP) the torque limitation becomes inactive.

► When the motor torque reaches the defined limit, the drive cannot follow the speed setpoint anymore and the output MCTRL-MMAX is set to HIGH.

External setting of torque limits

If the maximum torque reached in the field weakening operation is too low, the torque limits can be changed via the inputs MCTRL-HI-M-LIM and MCTRL-LO-M-LIM.

► MCTRL-HI-M-LIM defines the upper torque limit in [%] of the maximum torque displayed in C0057.

Maximum possible input value: 199.99 %

► MCTRL-LO-M-LIM defines the lower torque limit in [%] of the maximum torque displayed in C0057.

Minimum possible input value: -199.99 %

Note!

The maximum possible torque displayed under C0057refers to the basic speed range (zero speed to rated speed of the motor) and is calculated from the nameplate data and the setting of the maximum motor current under C0022.

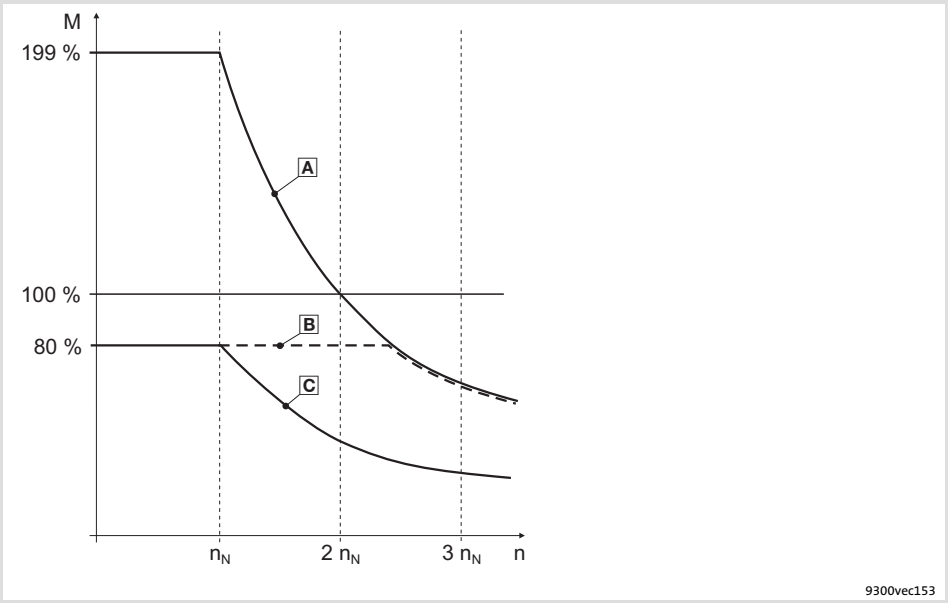

Fig. 8.2-22 Torque characteristics when being evaluated with C0898

A ”Internal limit characteristic” when C0898 = 1 and MCTRL-HI-M-LIM = 199 %
Boost of the upper torque limit when MCTRL-HI-M-LIM = 199 % and C0898 = 0

B Torque characteristic when C0898 = 1 and MCTRL-HI-M-LIM = 80 %

C Torque characteristic when C0898 = 0 and MCTRL-HI-M-LIM = 80 %

Evaluating torque limits using C0898

Code C0898 serves to evaluate the defined torque limits at the inputs MCTRL-LO-M-LIM and MCTRL-HI-M-LIM using the function $1/f_{act}$. This serves to reduce the torque.

Selection	Code	Description
Evaluation of the torque limit in the field weakening range	C0898 = 0	Lenze setting The input signals at MCTRL-LO-M-LIM and MCTRL-HI-M-LIM are evaluated with $1/f_{act}$.
	C0898 = 1	An ”internal limit characteristic” which corresponds to a maximum torque limit of ±199,99 % is evaluated with $1/f_{act}$. ● The torque remains constant until the limit characteristic is reached. This requires that the controller provides a sufficient amount of current and the motor is stable within the required speed range. ● The input signals at MCTRL-LO-M-LIM and MCTRL-HI-M-LIM are not evaluated with $1/f_{act}$.

Limitation of the output current

The output current is mainly limited for protecting the controller and stabilising the drive control.

If the maximum permissible motor load is exceeded, the maximum output current of the controller must be adjusted accordingly.

Parameter setting

Code	Function
C0022	Maximum current in motor mode
C0023	Maximum current in generator mode

If you select a motor via C0086 the maximum current of which is much lower than the output current of the controller, the maximum current in motor mode (C0022) is automatically limited to the double rated motor current.

Mode of functioning

In the vector control mode the limit values are complied with by means of the automatic limitation of the speed controller.

The speed controller is limited if the motor current has reached the limit set under C0022 or C0023 (the controller supplies the max. output current). In this status

Consequences

- ► The motor cannot follow the speed setpoint.
- ► MCTRL-IMAX is set to HIGH.
- ► When selecting the automatic chopper frequency setting (C0018 = 0 or 6) a switch-over to a lower chopper frequency is carried out, so that the unit will not be switched off.

Torque control with speed limitation

As an alternative to the speed control, the vector control can be switched to torque control with speed limitation.

Note!

In the basic configurations C0005 = 4xxx the torque control with speed limitation is already set.

► When MCTRL-N/M-SWT = HIGH, the torque control with speed limitation is active.
- The torque control with torque setpoint selection via MCTRL-M-ADD is active.
- MCTRL-M-ADD acts as a bipolar torque setpoint.
- The sign of the speed limitation value at MCTRL-N-SET is automatically created from the sign of the torque setpoint at MCTRL-M-ADD. Thus, the speed limitation value acts in both directions of rotation.
- The actual torque is output as analog signal (in [%] of M_{max} (C0057)) to MCTRL-MACT.

Stop!

If the motor is to create a holding torque at standstill, the torque setpoint must not fall below a certain limit.

► Depending on the motor type and accuracy of the identified motor parameters, the vector control can become unstable if the torque setpoint <10 % ... 20 %.

► Operate the motor with speed feedback when the required holding torque is within the critical region.

Automatic speed detection after controller enable - flying restart circuit

The flying restart circuit is especially suitable for applications with fan and drives with great mass inertia.

The flying restart circuit serves to enable the controller although the motor still rotates. The flying restart circuit automatically detects the current motor speed using this speed to start the motor control. This prevents the motor from braking to zero speed with subsequent acceleration.

Use C0140 to determine the search direction during the flying restart process.

- ► If the direction of rotation of the coasting machine is known, you can search in the direction of rotation or in the direction of the applied setpoint.
- ► If the direction of rotation of the coasting machine is not known, you can search in both directions of rotation or in both directions of the applied setpoint.

  In case of applications with fan, for example, search is possible in both directions if the direction of rotation of the free-running fan impeller is not known due to the air flow.

Note!

- ► The flying restart circuit is optimised for a power-adapted motor. Thus, the rated motor current should not exceed the rated controller current.
- ► Although the flying restart circuit is activated (C0142 = 2 or C0142 = 3), the flying restart process does not start if the pulse inhibit is deactivated again after an OU message.

  In order to start the flying restart process, connect e.g. the input DCTRL-CINHx with the output signal MONIT-OU. An OU message causes an internal controller inhibit. When the controller inhibit is deactivated, the flying restart process is started.

Special features of vector control

- ► With a known motor speed there is no need of the flying restart circuit if a suitable setpoint becomes effective instantaneously after controller enable (e.g. assign setpoint to NSET-CINH-VAL).
- ► By selecting a suitable setpoint the flying restart processes can be reduced to approx. 200 ms.
- ► For operation with feedback there is no need to activate the flying restart circuit as the signal as the signal MCTRL-NACT acts as the setpoint at NSET-CINH-VAL.

Setting

Selection	Code	Description
Search direction during flying restart process	C0140 = 0	Lenze setting Only search in the direction of the applied setpoint
	C0140 = 1	Only search against the direction of the applied setpoint
	C0140 = 2	Only search in positive direction of rotation
	C0140 = 3	Only search in negative direction of rotation
	C0140 = 4	Search at first in the direction of the applied setpoint and then against the direction
	C0140 = 5	Search at first against the direction and then in the direction of the applied setpoint
	C0140 = 6	Search at first in positive then in negative direction of rotation
	C0140 = 7	Search at first in negative then in positive direction of rotation
Reference speed for starting the search process	C0145 = 0	Flying restart circuit referenced to the maximum speed (C0011). Recommended when the motor speed is unknown
	C0145 = 1	Lenze setting Flying restart circuit referenced to the last current motor speed
	C0145 = 2	Speed setpoint, recommended when motor speed is known
Value of current during search process	C0146	Influences the value of current during the search process. Reduce the value in case of motors with low centrifugal mass (speed already increases during search process).
Search speed	C0147	Influences the search speed. A search process takes approx. 1 ... 2 s. It may be required to reduce the search speed to achieve a successful search process (reduce value).

Activation

Selection	Code	Description
Start protection	C0142 = 0	The flying restart circuit is inactive. protection against unexpected start-up means that a restart requires signal change for enabling the controller (e. g. LOW-HIGH edge at X5/28).
Automatic start	C0142 = 1	Lenze setting Automatic start, flying restart circuit is inactive
Start after deactivating the switch-on inhibit	C0142 = 2	Flying restart circuit is started after resetting IMP (mains connection, cancel of messages, (t > 0.5 s) or TRIP RESET) and renewed controller enable (e. g. LOW-HIGH edge at X5/28)
Starting without protection against unexpected start-up	C0142 = 3	Flying restart circuit gets active immediately. No renewed controller enable required (e. g. LOW-HIGH edge at X5/28).

Flying restart circuit with protection against unexpected start-up (C0142 = 2):

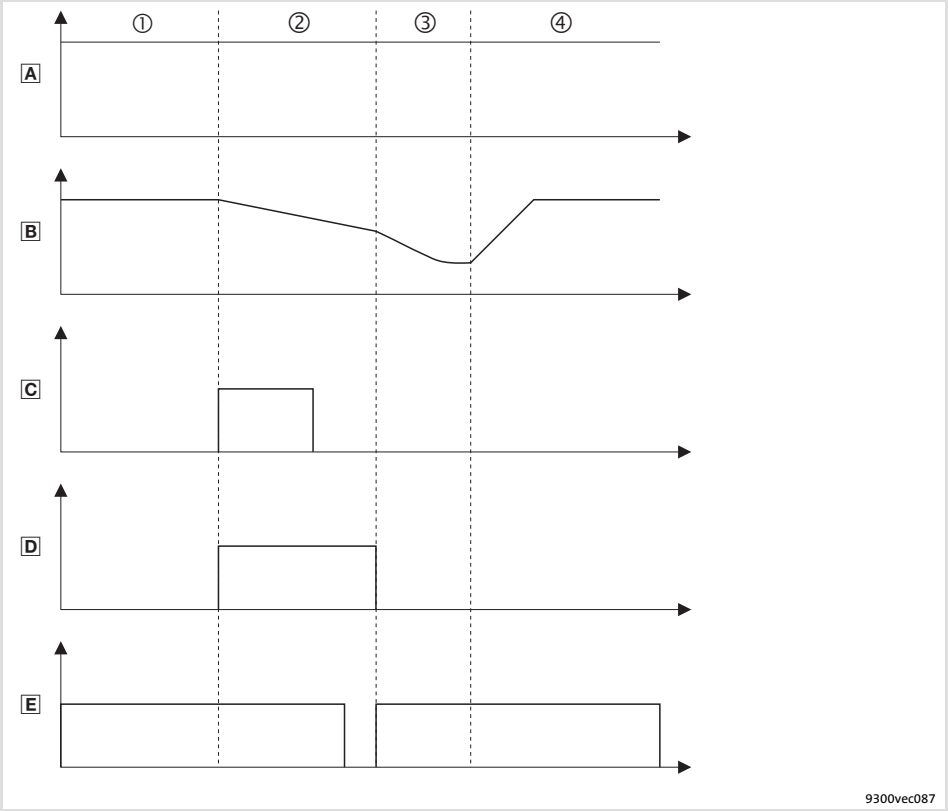

Fig. 8.2-23 Signal characteristic for manual start with flying restart circuit (C0142 = 2)

- A Speed setpoint (e.g. AIN-OUT)
- B Actual speed value
- C Fault (e.g. DCTRL-FAIL = HIGH)
- D Pulse inhibit (e.g. DCTRL-IMP = HIGH)
- E Enable controller (e.g. X5/28 = HIGH)
- ① The motor rotates with setpoint
- ② A fault (e.g. mains failure, TRIP SET) activates a pulse inhibit IMP . The motor coasts. After eliminating the fault (e.g. mains recovery, TRIP RESET) the pulse inhibit remains active until the controller is enabled again (e.g. LOW-HIGH edge at X5/28)
  Important in case of an OU message: if the OU message is not pending anymore, the pulse inhibit is deactivated.
- ③ The flying restart circuit is active now and determines the current motor speed
- ④ The motor is accelerated along the set acceleration ramp to the speed setpoint and is being kept there

Flying restart circuit without protection against unexpected start-up (C0142 = 3):

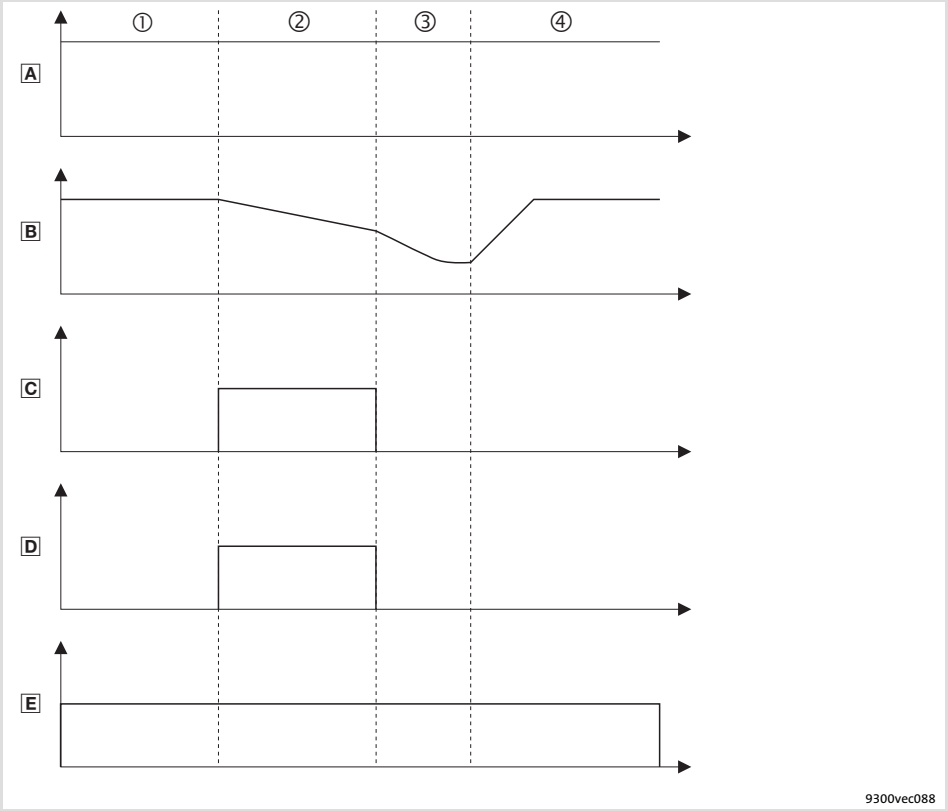

Fig. 8.2-24 Signal characteristic for automatic start with flying restart circuit (C0142 = 3)

- A Speed setpoint (e.g. AIN-OUT)
- B Actual speed value
- C Fault (e.g. DCTRL-FAIL = HIGH)
- D Pulse inhibit (e.g. DCTRL-IMP = HIGH)
- E Enable controller (e.g. X5/28 = HIGH)
- ① The motor rotates with setpoint
- ② A fault (e.g. mains failure, TRIP SET) activates a pulse inhibit IMP. The motor coasts. After eliminating the fault (e.g. mains recovery, TRIP RESET) the pulse inhibit is deactivated.
- ③ The flying restart circuit is active now and calculates the current motor speed. If, after an OU message, the pulse inhibit is deactivated again, the flying restart circuit is not started.
- ④ The motor is accelerated along the set acceleration ramp to the speed setpoint and is being kept there

Quick stop (QSP)

After a signal, the motor is decelerated to standstill when an internal ramp function generator has been activated.

Mode of operation

► Quick stop is active
- MCTRL-QSP = HIGH
- The control word DCTRL-QSP is applied
- DC injection braking (GSB) is not active (GSB has priority over quick stop)

► When quick stop is active:
- the motor decelerates to standstill with the deceleration time set in C0105,
- A torque control is deactivated and the motor is controlled by the speed controller.
- The torque limitations MCTRL-LO-M-LIM and MCTRL-HI-M-LIM are deactivated.
- MCTRL-QSP-OUT is set to HIGH.

Note!

When the motor is at standstill, the field current is injected into the motor.

Manual DC injection braking

- ► After a signal, the motor is braked by injecting a DC current.
- ► Braking in generator mode must be used for controlled brake ramps.
- ► The hold time (C0107) has no influence. The motor remains braked until MCTRL-GSB is set to LOW.

Note!
Manual DC injection braking has priority over quick stop.

Special features of vector control with feedback

- ► If the DC braking current (C0036) ≤ than the motor magnetising current, the motor magnetising current is injected.
- ► If the DC braking current (C0036) > than the motor magnetising current, the DC braking current is injected.

Setting

Selection	Code	Description
DC braking current	C0036	DC braking current with which the motor is braked

Stop!
An excessive DC braking current and braking time can thermally overload the motor. Special care must be taken when using self-ventilated motors.

Activation

The input MCTRL-GSB in the function block MCTRL is triggered with HIGH level.

- ► MCTRL-GSB = HIGH: Function is activated
- ► MCTRL-GSB = LOW: Function is not activated

Function procedure

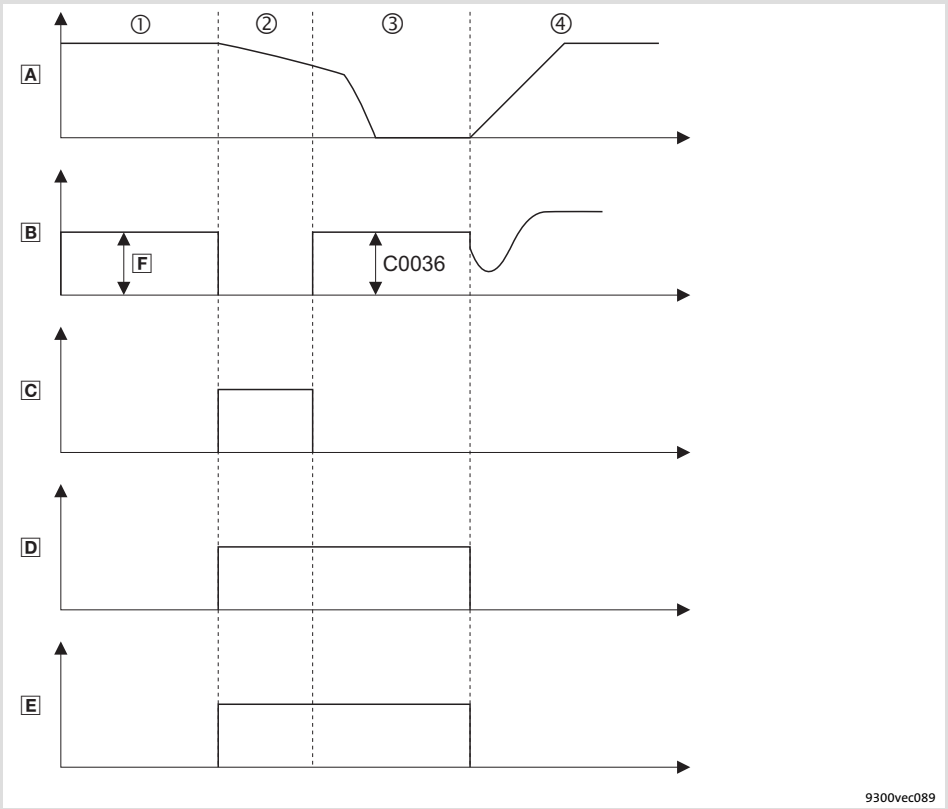

Fig. 8.2-25 Signal sequence with DC injection braking

- A Actual speed value of the motor (e. g. MCTRL-NACT)
- B Controller output current (e. g. MCTRL-IACT)
- C Pulse inhibit (e. g. DCTRL-IMP)
- D Activating DC injection braking (MCTRL-GSB)
- E DC injection braking is active (MCTRL-GSB-OUT)
  MCTRL-GSB-OUT = HIGH: Function is active
  MCTRL-GSB-OUT = LOW: Function is not active
- ① The motor rotates with the preset speed. The current adjusts itself as a function of the load F.
- ② DC injection braking is activated with MCTRL-GSB = HIGH. Pulse inhibit IMP is set. The motor coasts.
- ③ The pulse inhibit is deactivated and the DC braking current set in C0036 is injected
- ④ DC injection braking is deactivated with MCTRL-GSB = LOW
  The motor is accelerated to speed setpoint at the set acceleration ramp and is kept there.

Automatic DC injection braking

When the speed falls below a settable speed setpoint threshold, the function ”DC injection braking” is activated.

Note!
Automatic DC-injection braking has priority over quick stop.

Special features of vector control with feedback

- ► If the DC braking current (C0036) ≤ than the motor magnetising current, the motor magnetising current is injected.
- ► If the DC braking current (C0036) > than the motor magnetising current, the DC braking current is injected.

Setting

Selection	Code	Description
DC braking current	C0036	DC braking current with which the motor is braked
Speed setpoint threshold	C0019	If the values fall below the threshold, DC-injection braking is released
Hold time	C0107	Duration of DC-injection braking. After the hold time, pulse inhibit is set.

Stop!
An excessive DC braking current and braking time can thermally overload the motor. Special care must be taken when using self-ventilated motors.

Function procedure

Automatic DC injection braking provides two function procedures, each with a different reaction of the controller. The parameter setting is identical for both function procedures.

Function procedure 1:

► After the hold time has elapsed (C0107), the controller automatically sets pulse inhibit IMP.

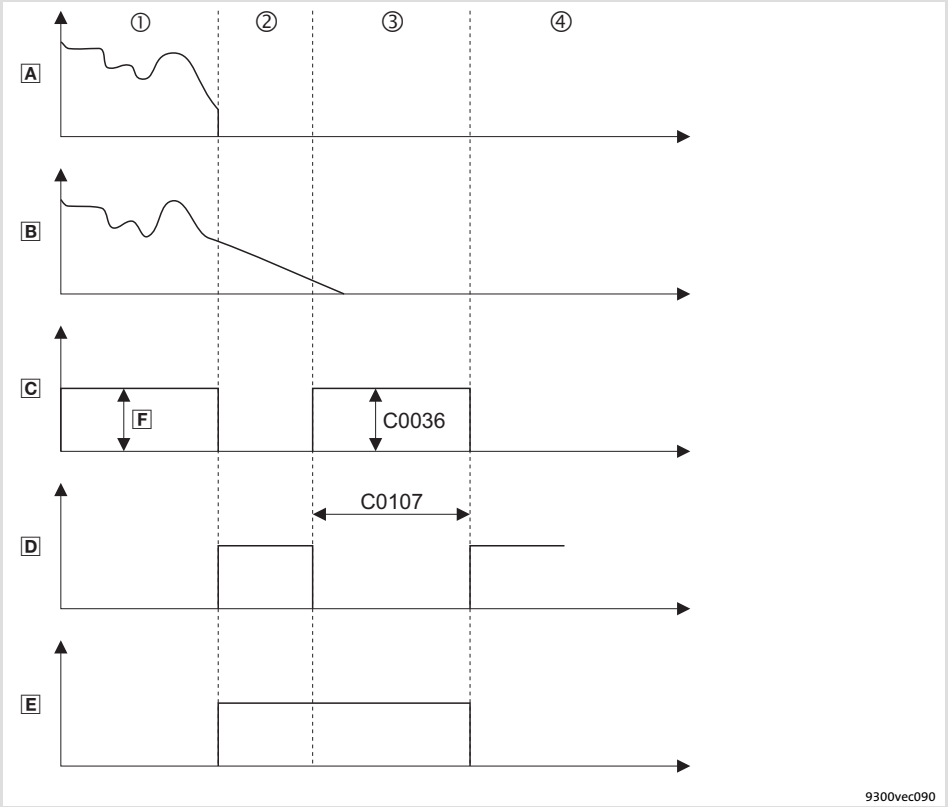

Fig. 8.2-26 Signal characteristic with automatic DC injection braking

- A Speed setpoint (e. g. AIN-OUT)
- B Actual speed value of the motor (e. g. MCTRL-NACT)
- C Controller output current (e. g. MCTRL-IACT)
- D Pulse inhibit (e. g. DCTRL-IMP)
- E DC injection braking is active (MCTRL-GSB-OUT)
  MCTRL-GSB-OUT = HIGH: Function is active
  MCTRL-GSB-OUT = LOW: Function is not active
- ① The motor rotates with the preset speed. The current adjusts itself as a function of the load F.
- ② With a speed setpoint < speed threshold (C0019), DC injection braking is activated. Pulse inhibit IMP is set. The motor coasts.
- ③ The pulse inhibit is deactivated and the DC braking current set in C0036 is injected
- ④ After the hold time (C0107) pulse inhibit IMP is set

Function procedure 2:

► If you define a speed setpoint > speed threshold (C0019) before the hold time elapses, DC-injection braking is deactivated and the drive follows the speed setpoint. If the speed falls below the threshold again, DC-injection braking is reactivated and the hold time is restarted.

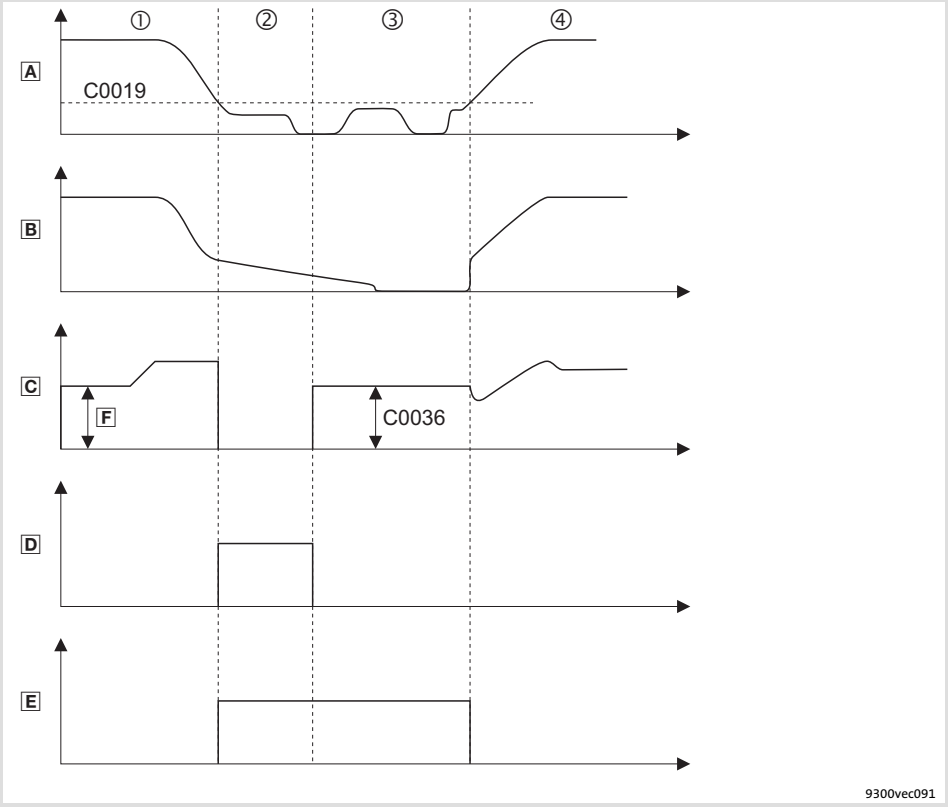

Fig. 8.2-27 Signal characteristic with automatic DC injection braking

- A Speed setpoint (e. g. AIN-OUT)
- B Actual speed value of the motor (e. g. MCTRL-NACT)
- C Controller output current (e. g. MCTRL-IACT)
- D Pulse inhibit (e. g. DCTRL-IMP)
- E DC injection braking is active (MCTRL-GSB-OUT)
  MCTRL-GSB-OUT = HIGH: Function is active
  MCTRL-GSB-OUT = LOW: Function is not active
- ① The motor rotates with the preset speed. The current adjusts itself as a function of the load F.
- ② With a speed setpoint < speed threshold (C0019), DC injection braking is activated. Pulse inhibit IMP is set. The motor coasts.
- ③ The pulse inhibit is deactivated and the DC braking current set in C0036 is injected
- ④ DC-injection braking is deactivated as soon as the speed setpoint exceeds the speed threshold (C0019). The motor is accelerated to the defined speed setpoint and kept there.

Oscillation damping

Suppressing no-load oscillations in case of:

► Drives with different rated power of controller and motor, e. g. when operating with high switching frequency and the power derating involved.

► Operation of higher-pole motors.

► Operation of three-phase AC drives > 10 kW.

Compensation of resonances in the drive kit:

► Certain asynchronous motors may show this behaviour above $^1/_3$ of the rated speed ($^1/_3 \cdot n_n$). This may result in an unstable operation (current and speed variations).

Adjustment

The Lenze setting is designed for power-adapted motors.

Usually, the speed oscillations can be reduced by changing the Lenze setting of the codes C0234 oder C0236 by the factor 2 ... 5.

1. Approach the range with speed oscillations.
2. Change the influence of the oscillation damping in C0234 (generally, increase it).
3. Increase the limitation of the oscillation damping in C0236.
4. Change filter time in C0235 in the range of 1 ... 20 ms, if necessary.

► These can be indicators for smooth running:
– Constant motor current characteristic
– Reduction of the mechanical oscillations in the bearing seat

Note!

Restricted effect with vector control

► The oscillation damping has no influence on the drive behaviour at low tendency to oscillation of the speed controller.

► Especially for drives > 55 kW with a tendency to oscillation it may be necessary to deactivate the oscillation damping (C0234 = 0 %).

► For operation with feedback the oscillation damping has no influence.

Slip compensation

Vector control

Use C0021 to change the influence of the rotor resistance (C0082) proportionally:

► Reduce the value in C0021 at an increasing speed (negative values)

► Increase the value in C0021 at a decreasing speed

Note!

When setting the vector control mode, the slip compensation (C0021) is automatically set to 0.0 %.

► When you switch back to the V/f characteristic control mode, the slip compensation must be re-adapted.

Inhibiting the direction of rotation

If the motor may only rotate in one direction, you can limit the output voltage generation to one direction of rotation via C0909.

Code	Description
C0909 = 1	The motor rotates in both directions
C0909 = 2	Motor rotates clockwise, ”positive direction of rotation” (View of the motor shaft)
C0909 = 3	Motor rotates counter-clockwise, ”negative direction of rotation” (View of the motor shaft)

8.3 Monitoring

Various monitoring functions (📖 8.41) protect the drive system against impermissible operating conditions.

If a monitoring function responds,

► the set fault response is triggered to protect the drive and

► the fault message is entered at position 1 in the fault history buffer (C4168/x) (📖 9.2-1).

8.3.1 Fault responses

Depending on the failure, one or more of the following responses are possible:

Response	Effects on the drive and controller		Danger warnings
TRIP (highest priority)	● Switches the power outputs U, V, W to a high resistance until TRIP is reset ● The drive coasts (no control!). ● After TRIP reset, the drive accelerates to its setpoint on the ramps set.		
Message	Switches the power outputs U, V, W to a high resistance as long as the message is active.		**Danger!** The drive restarts automatically if the message is no longer available.
	● Short-time message ≤ 0.5 s	The drive coasts (no control) as long as the message is active. If the message is no longer available, the drive accelerates to its setpoint with maximum torque.	
	● Longer message > 0.5 s	The drive coasts (due to internal controller inhibit) as long as the message is active. If required, restart the drive.	
Warning	● Only display of the failure. ● The drive operates in a controlled manner.		**Stop!** As these responses have no effect on the drive behaviour, the drive can be destroyed.
Off	● No response on failures! Monitoring is deactivated.		

8.3.2 Monitoring times for process data input objects

Each process data input object can monitor whether a telegram has been received within a time set. As soon as a telegram arrives, the corresponding monitoring time (C0357) is restarted (”retriggerable monoflop” function).

The following assignments are valid:

Setting the response to the monitoring:

► C0591 for CAN1_IN (”CE1”)

► C0592 for CAN2_IN (”CE2”)

► C0593 for CAN3_IN (”CE3”)

The following can be set:

► 0 = error (TRIP) - controller sets controller inhibit (CINH)

► 2 = warning

► 3 = monitoring is switched off

You can also use the signals as binary output signals, e. g. for the assignment of the output terminal.

Bus off

If the controller disconnects from the CAN bus due to faulty telegrams, the ”BusOffState” (CE4) signal is set.

”BusOffState” can trigger an error (TRIP) or warning (like CE1, CE2, CE3). You can also switch the signal off. The response is set via C0595. You can also assign the terminal output.

Reset node

Changes with regard to the baud rates, the CAN node addresses, or the addresses of process data objects are only valid after a reset node.

The reset node can be effected by:

► A reconnection of the low-voltage supply

► Reset node via the bus system

► Reset node via C0358

8.3.3 Maximum speed

Stop!

Destruction of the drive!

► If the fault is triggered, the drive is without torque.

► In the event of an actual speed value encoder failure it is not guaranteed that the monitoring responds.

Protective measures:

► Use a mechanical brake if necessary.

► Special, system-specific measures are to be taken.

The NMAX fault is triggered if the system speed (MCTRL-NACT)

► exceeds the value set under C0596 or

► exceeds the maximum speed n_{max} (C0011) by twice the max. speed value.

A fault initiates TRIP NMAX. Other responses cannot be set.

8.3.4 Motor

Overcurrent in the motor cable (OC1)

Fault OC1 is triggered if the motor current exceeds the 2.25-fold rated controller current.

If a fault occurs, TRIP OC1 is triggered. Other responses cannot be set.

Earth fault in the motor cable (OC2)

Fault OC2 is activated in the case of a

► Short circuit to frame of the motor,

► Short circuit of a phase to the shield,

► Short circuit of a phase to PE,

► Too high capacitive charging current of the motor cable.

The response can be defined in C0574.

Overload during acceleration or deceleration (OC3)

Fault OC3 is activated in the case of a too great load during acceleration. The acceleration times or deceleration times (C0012, C0013, C0105) are set too short in proportion to the load.

If a fault occurs, TRIP OC3 is activated. Other responses cannot be set.

Failure of a motor phase (LP1)

If a current-carrying motor phase fails, a motor winding is broken or the current limit value set in C0599 is too high, the LP1 fault is triggered.

The monitoring is not appropriate for field frequencies > 480 Hz and when synchronous servo motors are used. Deactivate the monitoring at these conditions.

The response to exceeding the thresholds can be set under C0597.

Note!

The monitoring can only be activated if the function block MLP1 is entered in the processing table (C0465).

8.3.5 Controller current load (I x t monitoring)

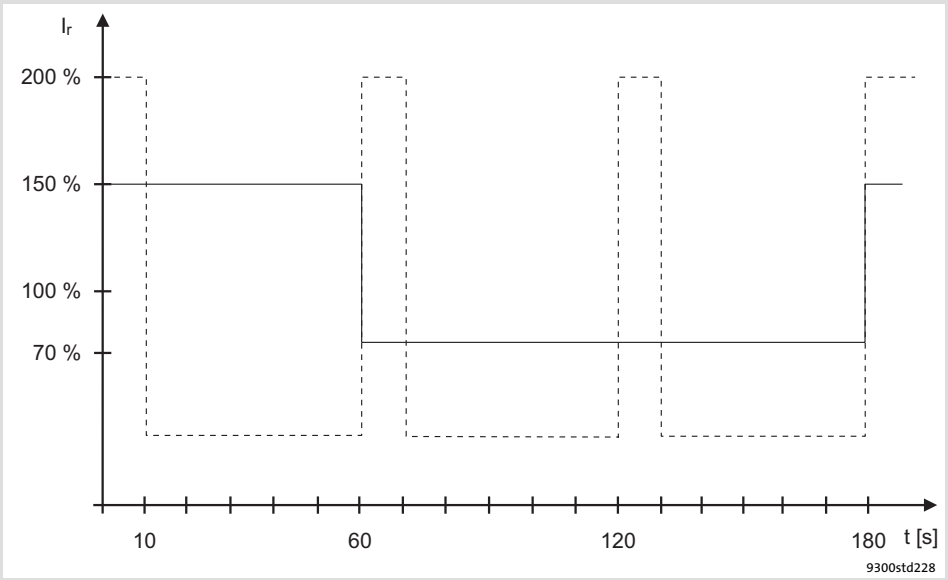

Fig. 8.3-1 I × t diagram

I_r	Device output current
———	100 % continuous thermal current at C0022 ≤ 1.5 I_r
- - - - - -	70 % continuous thermal current at C0022 > 1.5 I_r

The I × t monitoring monitors the current load of the controller. The current load is calculated from the mean value of the motor current over the acquisition period of 180 s.

The monitoring is set in such a way that the following operation modes are possible:

► Continuously with device output current = I_r.

► ≤ 60 s with device output current ≤ 1.5 x I_r.

A fault initiates TRIP OC5. Other responses cannot be set.

8.3.6 Motor temperature

KTY at X7 or X8

The motor temperature is monitored by means of a KTY. Connect the thermal sensor to the resolver cable at X7 or the encoder cable at X8.

► Warning threshold (OH7) can be set via C0121
– The switch-on point is 5 °C below the threshold set.

► Fixed warning threshold (OH3) = 150 °C
– The switch-on point is 135 °C.

The response for the case when the thresholds are exceeded can be defined in:

► C0584 (adjustable threshold)

► C0583 (fixed threshold)

Stop!

With the setting C0583 = 3, monitoring is deactivated. The motor temperature in C0063 shows 0 °C, even if C0584 = 2 (warning) is set.

Monitoring of the KTY at X7 or X8

The SD6 fault is triggered if there is a short or open circuit between X7/8 and X7/9 or X8/5 and X8/8.

The response can be set under C0594.

PTC thermistor or thermal contact (NC contact) at T1, T2

The motor temperature is monitored with a PTC thermistor or thermal contact. Wire the temperature sensor to T1, T2.

► Fixed warning threshold (OH8)
– The switch-off threshold and the hysteresis depend on the temperature sensor (DIN 44081).

The response to exceeding the threshold can be set under C0585.

Stop!

Motor could be destroyed!

► If the responses ”Warning” or ”Off” are set, the motor could be destroyed by overload.

Protective measure:

► Set the response ”TRIP”.

8.3.7 Current load of motor (I^2 x t monitoring: OC6, OC8)

The I^2 × t-load of the motor is constantly calculated by the drive controller and displayed in C0066.

The I^2 x t-monitoring is designed in a way, that a motor with a thermal motor time factor of 5 min, a motor current of 1.5 x I_r and a trigger threshold of 100 % releases the monitoring after 179 s.

You can set different reactions with two adjustable trigger thresholds.

► Adjustable reaction OC8 (TRIP, Warning, Off).
– The reaction is set in C0606.
– The trigger threshold is set in C0127.
– The reaction OC8 can be used for example for an advance warning.

► Fixed reaction OC6-TRIP.
– The trigger threshold is set in C0120.

Response of the I^2 x t-monitoring	Condition
The I^2 x t-monitoring is deactivated. C0066 = 0 % and MCTRL-LOAD-I2XT = 0,00 % is set.	Set the controller inhibit at C0120 = 0 % and C0127 = 0 %.
The I^2 x t-monitoring is stopped. The actual value in C0066 and at the MCTRL-LOAD-I2XT output is held.	Allow controller release at C0120 = 0 % and C0127 = 0 %.
The I^2 x t-monitoring is deactivated. The motor load is displayed in C0066.	Set C0606 = 3 (Off) and C0127 > 0 %.

Note!

An OC6 or OC8 error message can only be reset if the I^2 × t-monitoring has fallen below the set trigger threshold by 5 %.

Calculating the release time

$$t = -(C0128) \cdot \ln\left(1 - \frac{y+1}{\left(\frac{I_M}{I_r}\right)^2 \cdot 100}\right)$$

I_M Actual motor current
I_r Rated motor current
y C0120 or C0127

► The thermal capacity of the motor is expressed by the thermal motor time factor (C0128). Please see the rated data of the motor for the value or ask the manufacturer of the motor.

Reading the release time off the diagram

Diagram for the determination of the release times of a motor with a thermal motor time factor of 5 min:

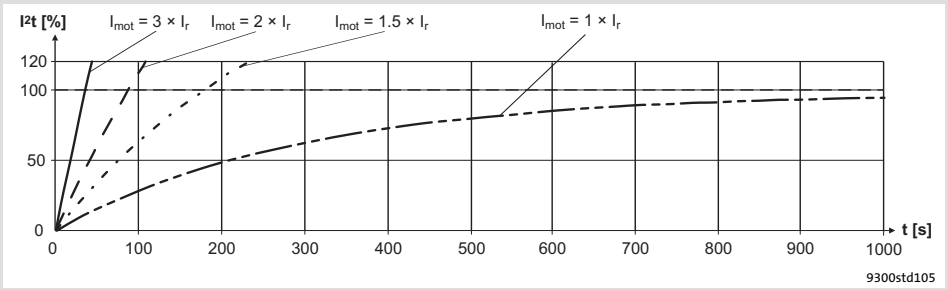

Fig. 8.3-2 $I^2 \times t$-monitoring: Release times for different motor currents and trigger thresholds

Imot	Motor current
I_r	Rated motor current
I^2t	I^2t load
T	Time

8.3.8 Heatsink temperature

Via a temperature threshold, the heatsink temperature of the controller can be monitored:

► Adjustable threshold (OH4) under C0122
– The reset point is 5° C below the adjusted threshold.

► Fixed threshold (OH) = 85° C
– The reset point is at 80° C.

The response for exceeding the adjustable threshold can be set under C0582.

8.3.9 DC-bus voltage

In C0173 the mains voltage and DC-bus voltage are set. From this the switching thresholds for overvoltage and undervoltage result.

EVF9335 ... EVF9338 EVF9381 ... EVF9383	Selection C0173	Mains voltage [V AC]	Operation with brake transistor	Message LU (undervoltage) set [V DC]	 reset [V DC]	Message OU (overvoltage) set [V DC]	 reset [V DC]
ExV210 ExV240 ExV270 ExV300	0	< 400	yes / no	285	430	770	755
	1	400	yes / no	285	430	770	755
	2	460	yes / no	328	473	770	755
	3	480	no	342	487	770	755
	4	480	yes	342	487	800	785
	5	500	yes / no	342	487	900	885
Ex ExV060 ExV110	read only	400	yes / no	285	430	700	685

C0173 = 1: Lenze setting

Overvoltage

If the DC-bus voltage exceeds the upper switch-off threshold set in C0173, warning OU is activated.

Undervoltage

If the DC-bus voltage falls below the lower switch-off threshold set in C0173, the LU message is triggered.

► An undervoltage message > 3 seconds is interpreted as an operating state (e.g. mains switched off) and entered in the history buffer. The entry is, however, deleted as soon as the cause has been eliminated (e.g. mains switched on again).

This operating state can occur if the control module is already supplied externally via terminals X5/39 and X5/59, but the mains voltage is not yet switched on.

► An undervoltage message < 3 seconds is interpreted as a fault (e.g.mains fault), entered in the history buffer and saved.

8.3.10 External error (EEr)

A HIGH signal at DCTRL-TRIP-SET triggers the EEr fault.

You can, for example, connect the digital input DCTRL-TRIP-SET with an input terminal (X5/Ex). In this way an external encoder can trigger the EEr fault.

The response can be set under C0581.

8.4 Overview of monitoring functions

The responses of monitoring functions can be partly parameterised via codes – in GDC in the parameter menu under **Monitoring** –.

Monitoring				**Possible responses** ● Lenze setting ✓ Setting possible				
Error message		**Description**	**Source**	CoDe	TRIP	Message	Warning	Off
0071	CCr	System fault	Internal		●			
x091	EEr	External monitoring (activated via DCTRL)	FWM	C0581	●	✓	✓	✓
Voltage supply								
2020	OU	Overvoltage in the DC bus (C0173)	MCTRL				●	
1030	LU	Undervoltage in the DC bus (C0173)	MCTRL			●		
0107	H07	Internal fault (power section)	Internal		●			
Communication								
x061	CE0	Communication error on the automation interface (AIF)	AIF	C0126	✓		✓	●
x062	CE1	Communication error at process data input object CAN1_IN (monitoring time can be set with C0357/1)	CAN1_IN	C0591	✓		✓	●
x063	CE2	Communication error at process data input object CAN2_IN (monitoring time can be set with C0357/2)	CAN2_IN	C0592	✓		✓	●
x064	CE3	Communication error at process data input object CAN3_IN (monitoring time can be set with C0357/3)	CAN3_IN	C0593	✓		✓	●
x065	CE4	BUS-OFF state of the system bus (CAN) (too many faulty telegrams)	CAN	C0595	✓		✓	●
Temperatures / sensors								
0050	OH	Heatsink temperature > 85° C	MCTRL		●			
x053	OH3	Motor temperature > 150° C	MCTRL	C0583	✓		✓	●
x054	OH4	Heatsink temperature > C0122	MCTRL	C0582			●	✓
x057	OH7	Motor temperature > C0121	MCTRL	C0584			●	✓
x058	OH8	Motor temperature across inputs T1 and T2 is too high. **Please note: In the case of "Warning" (C0585 = 2) or "Off" (C0585 = 3), the drive can be destroyed if the fault is not eliminated in time!**	MCTRL	C0585	✓		✓	●
x086	Sd6	Thermal sensor error at motor (X7 or X8)	MCTRL	C0594	✓		✓	●
x110	H10	Thermal sensor error at heatsink	FWM	C0588	●		1)	1)
x111	H11	Thermal sensor error in the device interior	FWM	C0588	●		1)	1)
Motor / feedback system								
0011	OC1	Motor cable overcurrent	MCTRL		●			
x012	OC2	Motor cable earth fault	MCTRL	C0574	●			✓
0013	OC3	Overload at acceleration or deceleration	MCTRL		●			

Monitoring				Possible responses ● Lenze setting ✓ Setting possible				
Error message		**Description**	**Source**	CoDe	TRIP	Message	Warning	Off
0015	OC5	I x t overload	MCTRL		●			
0016	OC6	I^2 x t overload	MCTRL		●			
0018	OC8	I^2 x t overload advance warning	MCTRL	C0606	✓		●	✓
x032	LP1	Motor phase failure (current limit can be set in C0599) **Please note: Can only be used for asynchronous motors. The function block MLP1 has to be entered in C0465.**	MCTRL	C0597	✓		✓	●
x083	Sd3	Interruption of the digital frequency coupling. The input signal ”Lamp Control” at X9/8 is LOW **Please note: In the case of ”Warning” (C0587 = 2), the drive can be destroyed if the fault is not eliminated in time!**	MCTRL	C0587	●		✓	✓
x085	Sd5	At analog input X6/1, X6/2, the input current is < 2 mA Monitoring only possible if C0034 = 1	MCTRL	C0598	✓		✓	●
0140	ID1	Motor data identifcation - characteristic	MCTRL		●			
0141	ID2	Motor data identification - motor data	MCTRL		●			
Speed								
0200	NMAX	Maximum speed (C0596) has been exceeded.	MCTRL		●			
Time-out / overflow								
0105	H05	Intern fault (memory)	Internal		●			
Parameter setting								
0072	PR1	Checksum error in parameter set 1	Internal		●			
0073	PR2	Checksum error in parameter set 2	Internal		●			
0074	PEr	Program error	Internal		●			
0075	PR0	Error in the parameter sets	Internal		●			
0077	PR3	Checksum error in parameter set 3	Internal		●			
0078	PR4	Checksum error in parameter set 4	Internal		●			
0079	PI	Fault during the parameter initialisation	Internal		●			

Representation of the error number:
x 0 = TRIP, 1 = message, 2 = warning
E. g. ”2091”: An external monitoring has triggered EEr warning
1) Setting only permitted by Lenze service

8.5 Code table

How to read the code table:

Column	Abbreviation	Meaning
Code	Cxxxx	Code Cxxxx
	1	Subcode 1 of Cxxxx
	2	Subcode 2 of Cxxxx
		● Parameter value of the code can be defined differently in each parameter set ● Parameter value is accepted immediately (ONLINE)
	*	Parameter value of the code is the same in all parameter sets
	ENTER	Changed parameter or the code or subcode is accepted after pressing SHIFT PRG
	STOP	Changed parameter of the code or subcode is accepted after pressing SHIFT PRG, if the controller is inhibited
Name		Name of the code
Lenze		Lenze setting (value on delivery or after restoring the delivery status with C0002)
	→	The column "IMPORTANT" contains further information
Selection	1 {%} 99	min. value {unit} max. value
IMPORTANT	-	Short, important explanations

Code		Possible settings			IMPORTANT
No.	Name	Lenze	Selection		
C0002 STOP	Par load	1			Loading a parameter set
			0	Load default	Restore the delivery status
			1	Load PS1	● Load parameter set saved in the controller and activate it ● Parameter set 1 is loaded automatically after every mains connection
			2	Load PS2	
			3	Load PS3	
			4	Load PS4	
			11	Load ext PS1	Load parameter set from the keypad into the controller and activate it
			12	Load ext PS2	
			13	Load ext PS3	
			14	Load ext PS4	
			20	ext -> EEPROM	Load all parameter sets from the keypad into the controller
C0003 ENTER	Par save	0			Save parameter set
			0	Ready	Saving is completed
			1	Save PS1	Save the parameters loaded in the controller into a parameter set (PS1 .... PS4)
			2	Save PS2	
			3	Save PS3	
			4	Save PS4	
			11	Save extern	All parameter sets (PS1 .... PS4) must be transferred from the controller to the keypad XT
C0004 ENTER	Op display	56	0 {1} 1999		Operating display ● Keypad shows selected code in the operating level if no other status messages of C0183 are active

Code		Possible settings				IMPORTANT	
No.	Name	Lenze	Selection				
C0005 STOP	Signal CFG					Selection of the basic configuration	
		1000	0	Common	Modified basic configuration	The first two digits indicate the predefined basic function, e. g.: ● 01xxx: Speed control The third digit indicates additional functions: ● xx0xx: No additional function ● xx1xx: Brake control ● xx2xx: Setpoint selection via motor potentiometer ● xx3xx: PID controller ● xx4xx: Mains failure control ● xx5xx: Setpoint selection via master frequency ● xx6xx: Gearbox factor - analog trimming ● xx7xx: Gearbox factor - digital trimming ● xx8xx: Master frequency ramp function generator The fourth digit indicates the predefined voltage source for the control terminals: ● xxx0x: External supply voltage ● xxx1x: Internal supply voltage The fifth digit indicates the predefined device control ● xxxx0: Terminal control ● xxxx1: RS232, RS485 or optical fibre ● xxxx3: INTERBUS or PROFIBUS-DP ● xxxx5: System bus (CAN)	
			100	CFG: emty	All internal connections are removed		
			1000	Speed mode	Speed control		
			2000	Step mode	Step control		
			3000	Lead screw	Traversing control		
			4000	Torque mode	Torque control		
			5000	DF master	Digital frequency master		
			6000	DF slv bus	Master frequency slave (bar)		
			7000	DF slv cas	Digital frequency slave (cascade)		
			8000	Dancer ctrl e	Dancer position control with external diameter measurement		
			9000	Dancer ctrl i	Dancer position control with internal diameter measurement		
C0006 STOP	Op mode	5				Selection of the operating mode for the motor control	
			1	vector ctrl	Vector control without or with speed feedback	**In case of the first selection enter the motor data and identify them with C0148.**	📖 6.8-8
			5	V / f	V/f characteristic control	Commissioning without identification of the motor data is possible ● Advantage of identification with C0148: Improved smooth running at low speeds	📖 6.8-4
C0009	LECOM address	1	1	{1}	99	LECOM controller address ● Bus device number when operated via interface ● 10, 20 ... 90 reserved for broadcast to device groups with RS232, RS485, optical fibre	

Code		Possible settings					IMPORTANT		
No.	Name	Lenze	Selection						
C0010	N_{min}	0	0		{1 rpm}	36000	● Reference value for the absolute and relative setpoint selection for the acceleration and deceleration times ● C0059 must be set correctly ● Set C0010 < C0011 ● C0010 is only effective in case of analog setpoint selection via AIN1 **Important: For parameter setting via interface, major changes in one step should only be made when the controller is inhibited.**	Minimum speed	📖 6.10-1
C0011	N_{max}	3000	0		{1 rpm}	36000		Maximum speed	
C0012	Tir (acc)	5.00	0.00		{0.01 s}	9999.90	Acceleration time T_{ir} of the main setpoint ● Refers to speed change 0 ... C0011		📖 6.10-3
C0013	Tif (dec)	5.00	0.00		{0.01 s}	9999.90	Deceleration time T_{if} of the main setpoint ● Refers to speed change 0 ... C0011		
C0014	V/f charact.	0					Characteristic in the V/f characteristic control mode		📖 8.2-25
			0	Linear			Linear V/f characteristic		
			1	square			Square V/f characteristic		
C0015	Rated freq	50	10		{1 Hz}	5000	V/f-rated frequency In C0015 you can set a base frequency which differs from the rated motor frequency (C0089) ● Lenze setting: C0015 = C0089 ● Changing C0086 or C0089 overwrites the value in C0015		📖 8.2-25
C0016	Umin boost	0.00	0.00		{0.01 %}	100.00	U_{min} boost (FCODE) ● C0016 = 1 % corresponds to a boost of 1 % of the rated motor voltage (C0090) ● Code is freely configurable		📖 6.8-4
C0017	FCODE (Qmin)	50	-36000		{1 rpm}	36000	Q_{min}-switching threshold (FCODE) ● Programmable speed threshold ● If the current speed is < C0017, CMP1-OUT is activated. ● Freely configurable code		

Code		Possible settings				IMPORTANT	
No.	Name	Lenze	Selection				
C0018	fchop	6				Switching frequency of the inverter ● General rule: the lower the switching frequency the – lower the power loss – higher the noise generation – better the concentricity factor – Observe derating information at high switching frequencies ● The max. output frequency (f_{out}) amounts to: – f_{chop} = 16 kHz ⇒f_{out} = 600 Hz – f_{chop} = 8 kHz ⇒f_{out} = 300 Hz – f_{chop} = 4 kHz ⇒f_{out} = 150 Hz – f_{chop} = 2 kHz ⇒f_{out} = 150 Hz	📖 6.9-1
			0	auto chop	automatic change-over of the switching frequency between 16/8/2 kHz		
			1	2 kHz sin	optimised smooth running		
			2	4 kHz f_top	power-optimised		
			3	8 kHz f_top	power-optimised		
			4	8 kHz sin	noise optimised		
			5	16 kHz sin	noise optimised		
			6	auto 8/2 kHz	noise / power-optimised with automatic change-over to low switching frequency		
C0019	Thresh nact=0	0	-36000	{1 rpm}	36000	Operating threshold - automatic DC injection brake (Auto-GSB) ● Falling below the threshold in C0019 activates automatic DC injection braking when the holding time set under C0107 > 0	📖 8.2-25 📖 8.2-48
C0020	turn value	100	0	{1 %}	200	Influence on concentricity factor ● Manual influence on the concentricity factor of the motor	
C0021	slipcomp	→	-20.00	{0.01 %}	20.00	Slip compensation → Change of C0086, C0087 or C0089 sets C0021 to the calculated rated slip of the motor ● When changing over to the vector control mode, C0021 is set to 0	📖 6.11-1 📖 8.2-25 📖 8.2-48
C0022	IMAX CURRENT	→	0	{0.01 A}	-	I_{max} limit in motor mode → Depending on C0086	📖 6.6-13
C0023	Imax gen.	→	0	{0.01 A}	-	I_{max} limit in generator mode → Depending on C0086	📖 6.6-13
C0025 STOP	Feedback type	1				Speed feedback	📖 6.7-1
			1	no feedback	No feedback		
			100	IT (C420) - X8	Input of the number of increments in C0420	Incremental encoder at X8 ● Incremental encoders with TTL level can only be connected to X8.	
			101	IT (C420) - X9	Input of the number of increments in C0420	Incremental encoder at X9 ● Connect incremental encoders with HTL-level on X9 only	
					Number of increments:	Incremental encoder at X8 ● Incremental encoders with TTL level can only be connected to X8.	
			110	IT512-5V	512 inc		
			111	IT1024-5V	1024 inc		
			112	IT2048-5V	2048 inc		
			113	IT4096-5V	4096 inc		

Code		Possible settings				IMPORTANT	
No.	Name	Lenze	Selection				
C0026			-199.99	{0.01 %}	199.99	Free control code FCODE 26/1 and FCODE26/2	📖 6.5-4 See System Manual (extension)
1	FCODE (offset)	0.00				Offset of AIN1 (X6/1, X6/2)	
2	FCODE (offset)	0.00				Offset of AIN2 (X6/3, X6/4)	
C0027			-199.99	{0.01 %}	199.99	Free control code FCODE 27/1 and FCODE27/2	
1	FCODE (gain)	100.00				Gain AIN1 (X6/1, X6/2) ● 100 % = gain 1	
2	FCODE (gain)	100.00				Gain AIN2 (X6/3, X6/4) ● 100 % = gain 1	
C0030	DFOUT const	3	0	256 inc/rev		Function block DFOUT ● Setting of the constant (increments per revolution) for the master frequency output X10	📖 8.2-8
			1	512 inc/rev			
			2	1024 inc/rev			
			3	2048 inc/rev			
			4	4096 inc/rev			
			5	8192 inc/rev			
			6	16384 inc/rev			
C0032	FCODE Gearbox	1	-32767	{1}	32767	Gearbox factor - numerator of the function block DFSET ● Freely configurable code	📖 8.2-18
C0033	Gearbox denom	1	1	{1}	32767	Gearbox factor - denominator of the function block DFSET	📖 8.2-18
C0034	Mst current	0	0	-10 V ... +10 V		Voltage / current range for analog signals at input X6/1, X6/2 ● Observe jumper position of X3	📖 5.8-8 📖 6.5-4
			1	4 mA ... 20 mA			
			2	-20 mA ... +20 mA			
C0036	DC brk value	0.0	0.0	{0.1 A}	-	Set DC braking current → depends on the controller	📖 8.2-25 📖 8.2-48
C0037	Set-value rpm	0	-36000	{1 rpm}	36000	Setpoint selection	
C0038			0	{1 rpm}	36000	Suppress speed ranges, function block NLIM1 ● Speed ranges are only run through dynamically ● Static behaviour in the inhibited range is suppressed	See System Manual (extension)
1	N 1 start	0				Suppress speed range 1	
2	N 1 stop	0					
3	N 2 start	0				Suppress speed range 2	
4	N 2 stop	0					
5	N 3 start	0				Suppress speed range 3	
6	N 3 stop	0					

Code		Possible settings				IMPORTANT	
No.	Name	Lenze	Selection				
C0039			-36000	{1 rpm}	36000	JOG setpoints for the speed setpoint conditioning, function block NSET ● Parameter setting of the fixed speeds (JOG setpoints) ● Activation via binary coding of digital input signals in C0787/1 ... C0787/4 ● For coding see description of function block NSET	See System Manual (extension)
1	JOG set-value	1500					
2	JOG set-value	1000					
3	JOG set-value	500					
4	JOG set-value	200					
5	JOG set-value	100					
6	JOG set-value	50					
7	JOG set-value	25					
8	JOG set-value	10					
9	JOG set-value	5					
10	JOG set-value	0					
...	...	...					
15	JOG set-value	0					
C0040	Ctrl enable	0				Controller enable ● Controller can only be enabled if X5/28 = HIGH	🕮 6.4-1
			0	Ctrl inhibit		Controller inhibited	
			1	Ctrl enable		Controller enabled	
C0042	DIS: QSP					Quick stop ● Display only	🕮 8.2-25 🕮 8.2-48
			0	QSP inactive		Quick stop is not active	
			1	QSP active		Quick stop is active	
C0043	Trip reset	0	0	no/trip reset		Reset actual error	
			1	trip active		There is a TRIP error	
C0045	DIS: act JOG		0	Nset active	Nset is active	Active JOG setpoint for the speed setpoint conditioning, function block NSET ● Display of the activated fixed speed	See System Manual (extension)
			1	JOG1	JOG setpoint 1		
			2	JOG2	JOG setpoint 2		
			...	...	...		
			15	JOG15	JOG setpoint 15		
C0046	DIS: N		-199.99	{0.01 %}	199.99	Main setpoint for the speed setpoint conditioning, function block NSET ● Read only	
C0049	DIS: NADD		-199.99	{0.01 %}	199.99	Additional setpoint, function block NSET ● Read only	See System Manual (extension)
C0050	MCTRL-NSET2		-100.00	{0.01 %}	100.00	Speed setpoint, function block MCTRL ● Display of the speed in [%] of C0011	🕮 8.2-25 🕮 8.2-48
C0051	MCTRL-NACT		-36000	{1 rpm}	36000	Actual speed value, function block MCTRL ● Read only	🕮 8.2-25 🕮 8.2-48
C0052	MCTRL-Umot		0	{1 V}	800	Motor voltage, function block MCTRL ● Read only ● MCTRL-VACT = 100 % = C0090	🕮 8.2-25 🕮 8.2-48
C0053	UG-VOLTAGE		0	{1 V}	900	DC-bus voltage, function block MCTRL ● Read only ● MCTRL-DCVOLT = 100 % = 1000 V	🕮 8.2-25 🕮 8.2-48

Code		Possible settings				IMPORTANT	
No.	Name	Lenze	Selection				
C0054	IMot		0.0	{0.1 A}	500.0	Current motor current, function block MCTRL ● Read only ● MCTRL-IACT = 100 % = C0022	📖 8.2-25 📖 8.2-48
C0056	MCTRL-MSET2		-100.00	{0.01 %}	100.00	Read only. The output signal depends on the operating mode: ● Current motor current in case of V/f characteristic control, function block MCTRL1 ● Torque setpoint in case of vector control, function block MCTRL2	📖 8.2-25 📖 8.2-48
C0057	MAX TORQUE		0	{1 Nm}	500	Maximum torque ● Read only ● Maximum possible torque of the drive configuration ● In case of V/f characteristic control depending on C0022, C0086, C0088 ● In case of vector control depending on C0022, C0086, C0088, C0091	
C0058	MCTRL-FACT		-600.0	{0.1 Hz}	600.0	Output frequency ● Display only ● MCTRL-FACT = 100.0 % = 1000.0 Hz	📖 8.2-25 📖 8.2-48
C0059	Mot pole no.		1	{1}	50	Pole pair number of the motor ● Display only	
C0061	Heatsink temp		0	{1 °C}	100	Heatsink temperature ● Read only ● If the temperature of the heatsink > 85 °C, the controller sets TRIP OH ● Early warning is possible via OH4, temperature is set in C0122	See System Manual (extension)
C0063	Mot temp		0	{1 °C}	200	Motor temperature ● Read only ● Monitoring of the motor temperature must be activated. ● KTY at X8/5, X8/8: – At 150 °C, TRIP OH3 is set – Early warning is possible via OH7, temperature is set in C0121 ● PTC, thermal contact at T1, T2: – Release sets TRIP or warning OH8	📖 8.2-25 📖 8.2-48
C0064	Utilization		0	{1 %}	150	Device utilisation I×t ● Read only ● Device utilisation during the last 180 s of operating time ● C0064 > 100 % releases warning OC5 ● C0064 > 140 % limits the output current of the controller to 67 % of the maximum current in C0022	📖 8.2-25 📖 8.2-48

Code		Possible settings				IMPORTANT	
No.	Name	Lenze	Selection				
C0066	MOTOR LOAD		0	{1 %}	250	Motor load $I^2 \times t$	📖 8.2-25 📖 8.2-48
C0067	Act trip		📖 Selection list 10			Momentary fault message ● Display only	
C0070	Vp speed CTRL	10.0	0.0	{0.1 }	255.9	Gain of speed controller	📖 8.2-25 📖 8.2-48
C0071	Tn speed CTRL	50	1	{1 ms}	6000	Integral-action time of speed controller C0071 = 6000 ms: No integral-action time	
C0074	limit N	10.00	0.00	{0.01 %}	100.00	Limitation of the speed controller ● Influence of the speed controller for V/f characteristic control with feedback ● max. setpoint difference in percent	📖 8.2-25 📖 8.2-48
C0075	Vp curr CTRL	0.20	0.00	{0.01 }	0.99	Gain of current controller ● Vector control: gain of current controller ● V/f characteristic control: maximum current controller	📖 8.2-25 📖 8.2-48
C0076	Tn curr CTRL	10.0	0.1	{0.1 ms}	2000.0	Integral-action time of current controller ● Vector control: integral-action time of current controller ● V/f characteristic control: maximum current controller ● C0076 = 2000 ms: current controller is switched off	📖 8.2-25 📖 8.2-48
C0077	Ti field CTRL	4.0	0.3	{0.1 ms}	6000.0	Integral-action time of field controller ● Only active in case of vector control with feedback	
C0078	Tn slip CTRL	100	1	{1 ms}	6000	Integral-action time of slip controller ● Filter time for slip compensation (C0021) ● Only active with V/f characteristic control	📖 8.2-25
C0079	Adapt I-CTRL	100.00	10.00	{0.01 %}	100.00	Adaption of the current controller ● Evaluation for the reset time T_{ni} of the current controller ● Effective for setpoint = 0 ● Is increased automatically to 100 % up to rated speed ● C0079 = 100 %: no adaption of the reset time ● C0079 < 100 %: – evaluation of the reset time:	📖 8.2-25 📖 8.2-48
C0080	Vp field CTRL	0.00	0.00	{0.01 }	0.99	Influence on the motor magnetising current set in C0095 ● Not effective when C0006 = 1 and C0025 > 1 ● Sphere of influence is effective from 0 Hz to the frequency set in C1583	📖 6.6-1 📖 6.11-5

Code		Possible settings				IMPORTANT	
No.	Name	Lenze	Selection				
C0081 STOP	Mot power	→	0.01	{0.01 kW}	500.00	Rated motor power → Change of C0086 resets value to factory setting ● Change of C0081 sets C0086 = 0	
C0082 STOP	Mot Rr	→	0.000	{0.001 Ω}	65.000	Motor rotor resistance → Value is evaluated by motor parameter identification from C0087, C0088, C0089, C0090 and C0091 ● Selection of a motor in C0086 sets the corresponding rotor resistance value	📖 6.6-1 📖 6.6-14
C0084 STOP	Mot Rs	→	0.00	{0.01 mΩ}	100000.00	Motor stator resistance → Value is determined by motor parameter identification (C0148, C0149)	📖 6.6-1 📖 6.6-14
C0085 STOP	Mot Lss	→	0.0	{0.1 mH}	6500.0	Motor leakage inductance → Value is evaluated by motor parameter identification (C0148, C0149)	📖 6.6-1 📖 6.6-14
C0086 STOP	Mot type	→	📖 Motor selection list			Motor type selection → depending on the controller used ● Motor selection in C0086 sets the corresponding parameters in C0021, C0022, C0081, C0087, C0088, C0089, C0090, C0091	📖 6.6-1
C0087 STOP	Mot speed	→	50	{1 rpm}	36000	Rated motor speed → depending on C0086 ● Motor selection in C0086 set the corresponding rated motor speed in C0087 ● Change of C0087 sets C0086 = 0	📖 6.6-1
C0088 STOP	MOT CURRENT	→	0.5	{0.1 A}	500.0	Rated motor current → Depending on C0086 ● Selection of a motor in C0086 sets the corresponding rated motor current in C0088 ● Change of C0088 sets C0086 = 0	📖 6.6-1
C0089 STOP	Mot frequency	→	10	{1 Hz}	5000	Rated motor frequency → depending on C0086 ● Motor selection in C0086 sets the corresponding rated motor frequency in C0089 ● Change of C0089 sets C0086 = 0	📖 6.6-1
C0090 STOP	Mot voltage	→	0	{1 V}	1000	Rated motor voltage → depending on C0086 ● Motor selection in C0086 sets the corresponding rated motor voltage in C0090 ● Change of C0090 sets C0086 = 0	📖 6.6-1

Code		Possible settings				IMPORTANT	
No.	Name	Lenze	Selection				
C0091 STOP	Mot cos phi	→	0.50	{0.01 }	1.00	Motor cos φ → depending on C0086 ● Motor selection in C0086 sets the corresponding motor cos φ in C0091 ● Change of C0091 sets C0086 = 0	📖 6.6-1
C0092 STOP	Mot Ls	→	0.0	{0.1 mH}	6500.0	Motor stator inductance → Value is evaluated by motor parameter identification from C0088, C0089, C0090 and C0091 → Selection of a motor in C0086 sets the corresponding stator inductance value in C0092	📖 6.6-1
C0093	DRIVE IDENT					Controller identification ● Read only	
			0	invalid		Damaged power section	
			1	none		No power section	
			9321 ... 9333	9321VC ... 9333VC		Display of the controller used	
C0094	Password	0	0	{1}	9999	Password ● C0094 = 1 ... 9999: Free access to the user menu only	📖 7.2-9
C0095 STOP	Mot Io	→	0.00	{0.01 A}	1000.00	Motor magnetising current → depending on C0086, C0088 and C0091 ● Change of C0086, C0088 and C0091 sets C0095 to the Lenze setting ● Change of C0095 sets C0086 = 0	📖 6.6-1 📖 6.11-5
C0096			0	no protection	No password protection	Parameter access protection ● Extension of the access protection for AIF bus systems and CAN with activated password in C0094 ● All codes in the user menu can continued to be accessed.	
			1	R protection	Read protection		
			2	W protection	Write protection		
			3	R/W protection	Read/write protection		
1	AIF protect.	0				Parameter access protection AIF	
2	CAN protect.	0				Parameter access protection CAN	
C0099	S/W version		x.y x y	 Main version Subversion		Software version ● Read only	

Code		Possible settings				IMPORTANT	
No.	Name	Lenze	Selection				
C0101			0.00	{0.01 s}	999.90	Additional acceleration times for speed setpoint conditioning, function block NSET ● Additional acceleration and deceleration times for the main setpoint ● Activation via binary coding of digital input signals in C0788/1 ... C0788/4 ● For coding see description of function block NSET	See System Manual (extension)
1	add Tir	0.00					
2	add Tir	0.00					
...	...	...					
15	add Tir	0.00					
C0103			0.00	{0.01 s}	999.90	Additional deceleration times for speed setpoint conditioning, function block NSET ● Additional acceleration and deceleration times for the main setpoint ● Activation via binary coding of digital input signals in C0788/1 ... C0788/4 ● For coding see description of function block NSET	
1	add Tif	0.00					
2	add Tif	0.00					
...	...	...					
15	add Tif	0.00					
C0104 STOP	select accel.	0				Selection of acceleration function of the linear ramp function generator of NSET	See System Manual (extension)
			0	a = const		Constant acceleration	
			1	t = const		Constant time	
			2	s = const		Constant path	
C0105	QSP Tif	5.00	0.00	{0.01 s}	999.90	Quick stop deceleration time ● The deceleration time refers to a speed variation of C0011 ... 0	📖 8.2-25 📖 8.2-48
C0107	holding time	0.00	0.00	{0.01 s}	9999.90	Hold time for automatic DC injection braking (Auto-GSB)	📖 8.2-25 📖 8.2-48
C0108			-199.99	{0.01 %}	199.99	Free control code FCODE108/1 and FCODE108/2	📖 6.5-6 See System Manual (extension)
1	FCODE (gain)	100.00				Gain of analog output signal AOUT1 (X6/62) ● 100 % = gain 1	
2	FCODE (gain)	100.00				Gain of analog output signal AOUT2 (X6/63) ● 100 % = gain 1	
C0109			-199.99	{0.01 %}	199.99	Free control code FCODE109/1 and FCODE109/2	
1	FCODE (offset)	0.00				Offset of analog output signal AOUT1 (X6/62)	
2	FCODE (offset)	0.00				Offset of analog output signal AOUT2 (X6/63)	
C0114			0	High active	HIGH level is active	Inversion of digital input signals at X5, function block DIGIN	📖 6.5-1 See System Manual (extension)
			1	LOW active	LOW level is active		
1	DIGIN1 pol	0				Terminal X5/E1	
2	DIGIN2 pol	0				Terminal X5/E2	
3	DIGIN3 pol	0				Terminal X5/E3	
4	DIGIN4 pol	1				Terminal X5/E4	
5	DIGIN5 pol	0				Terminal X5/E5	
5	DIGIN6 (ST) pol	0				Terminal X5/ST	

Code		Possible settings				IMPORTANT	
No.	Name	Lenze	Selection				
C0116 STOP					📖 Selection list 2	Configuration of free digital outputs (FDO) ● Signals can only be evaluated when being networked with automation interfaced	See System Manual (extension)
1	CFG: FDO-0	1000	FIXED0				
...	...	...	...				
32	CFG: FDO-31	1000	FIXED0				
C0117 STOP					📖 Selection list 2	Configuration of digital inputs signals, function block DIGOUT **A change of the basic configuration in C0005 changes the signal assignment!**	📖 6.5-3 See System Manual (extension)
1	CFG: DIGOUT1	15000	DCTRL-TRIP			Terminal X5/A1	
2	CFG: DIGOUT2	10650	CMP1-OUT			Terminal X5/A2	
3	CFG: DIGOUT3	500	DCTRL-RDY			Terminal X5/A3	
4	CFG: DIGOUT4	5003	MCTRL-MMAX			Terminal X5/A4	
C0118			0	High active	HIGH level is active	Inversion of digital output signals, function block DIGOUT	
			1	LOW active	LOW level is active		
1	DIGOUT1 pol	1				Terminal X5/A1	
2	DIGOUT2 pol	1				Terminal X5/A2	
3	DIGOUT3 pol	0				Terminal X5/A3	
4	DIGOUT4 pol	0				Terminal X5/A4	
C0120	OC6 LIMIT	0	00	{1 °C}	120	**Threshold for $I^2 \times t$ monitoring (motor).** ● 0 = $I^2 \times t$ monitoring switched-off ● $I^2 \times t$ > C0120 ⇨ trip OC6	
C0121	OH7 limit	150	45	{1 °C}	150	Setting of the operating temperature for monitoring OH7 ● Only for KTY at X8 ● Monitoring OH7 is configured in C0584	📖 6.6-10 See System Manual (extension)
C0122	OH4 limit	80	45	{1 °C}	85	Configuration of monitoring OH4 ● Monitoring of the heatsink temperature ● Activating monitoring with C0582 ● Temperature in C0122 reached: – Warning OH4 is initiated	See System Manual (extension)
C0125	Baudrate	0	0	9600 baud		LECOM baud rate ● Baud rate for accessory module 2102	
			1	4800 baud			
			2	2400 baud			
			3	1200 baud			
			4	19200 baud			
C0126	MONIT CE0	3	0	TRIP		Configuration of monitoring CE0 ● Error message in case of communication error AIF	See System Manual (extension)
			2	Warning			
			3	Off			
C0127	OC8 LIMIT	0	0	{1 °C}	120	**Threshold for $I^2 \times t$ advance warning (motor).** ● 0 = $I^2 \times t$ advance warning switched-off ● $I^2 \times t$ > C0127 ⇨ fault message OC8 (response set in C606)	
C0128	TAU MOTOR	5.0	0.1	{0.1 min}	50.0	**Thermal time constant of the motor** The time constant is required for calculating the $I^2 \times t$ disconnection.	

Code		Possible settings				IMPORTANT	
No.	Name	Lenze	Selection				
C0130	DIS: act Ti					Active T_i times for the speed setpoint conditioning, function block NSET ● Display of the additional acceleration and deceleration times for the main setpoint (C0101, C0103) ● Activation via binary coding of C0788/1 ... C0788/4	See System Manual (extension)
			0	C12/C13			
			1	Tir1/Tif1			
			2	Tir2/Tif2			
			...	...			
			14	Tir14/Tif14			
			15	Tir15/Tif15			
C0132 STOP	Controller enable fly delay	→	0	{1 ms}	9999	Minimum time for controller inhibit with active flying restart circuit, delays the start of the flying restart process after controller enable → depending on C0082, C0086, C0087, C0088, C0089, C0090, C0091, C0092 A change of one of the codes resets C0132 to the minimum time of the selected motor ● The time is derived from the double rotor time constant	📖 8.2-25 📖 8.2-48
C0133 STOP	RFG fly delay	100	0	{1 ms}	9999	Deceleration of the ramp function generator after flying restart process, function block NSET ● Deceleration time for the ramp function generator after a flying restart process	See System Manual (extension)
C0134	RFG charac	0	0	Linear	linear characteristic	Ramp function generator characteristic, function block NSET ● Characteristic of the main setpoint	See System Manual (extension)
			1	S-shaped	S-shaped characteristic		
C0135	Control word	0	Bit	Assignment		Control word, function block AIF ● Decimal control word when networked via automation interface AIF ● 16-bit information, binary coded	See System Manual (extension)
			0	reserved			
			1	reserved			
			2	reserved			
			3	Quick stop			
			4	reserved			
			5	reserved			
			6	reserved			
			7	reserved			
			8	Operation inhibited			
			9	Controller inhibit			
			10	TRIP SET			
			11	Trip reset			
			12	reserved			
			13	reserved			
			14	reserved			
			15	reserved			
C0136						Display of the control words in C0135, AIF-IN and CAN-IN1	See System Manual (extension)
1	Ctrl wrd C135					Control word C0135	
2	Ctrl wrd CAN					Control word CAN	
3	Ctrl wrd AIF					Control word AIF	

Code		Possible settings				IMPORTANT	
No.	Name	Lenze	Selection				
C0140 STOP	select direct	0				Search direction during flying restart process ● Positive direction of rotation: The motor rotates in CW direction with view on the motor shaft ● Negative direction of rotation: The motor rotates in CCW direction with view on the motor shaft	📖 8.2-25 📖 8.2-48
			0	NSET		Only search in the direction of the applied setpoint	
			1	inv. Nset		Only search against the direction of the applied setpoint	
			2	pos.		Only search in positive direction of rotation	
			3	neg.		Only search in negative direction of rotation	
			4	Both, Nset		Search at first in the direction of the applied setpoint and then against the direction	
			5	Both, inv. Nset		Search at first against the direction and then in the direction of the applied setpoint	
			6	Both pos.		Search at first in positive then in negative direction of rotation	
			7	Both neg.		Search at first in negative then in positive direction of rotation	
C0141	FCODE (setval)	0.00	-199.9	{0.01 }	199.99	Main setpoint, freely configurable code (FCODE) ● Used as main setpoint in the basic configurations C0005 = xxx1	
C0142	Start options	1				Starting condition for the flying restart circuit	📖 8.2-36 📖 8.2-65
			0	Start lock		● Automatic start is inhibited after – mains connection – Cancel of a message (t > 0.5 s) – Trip reset ● Flying restart circuit is inactive ● Start after HIGH-LOW-HIGH level change at X5/28	
			1	Auto start		Automatic start when X5/28 = HIGH ● Flying restart circuit is inactive	
			2	flying lock		● Automatic start is inhibited after – mains connection – Cancel of a message (t > 0.5 s) – Trip reset ● Flying restart circuit is active ● Start after HIGH-LOW-HIGH level change at X5/28	
			3	Fly restart		Automatic start when X5/28 = HIGH ● Flying restart circuit is active	

Code		Possible settings					IMPORTANT	
No.	Name	Lenze	Selection					
C0143	limit 2 kHz	0.0	0.0		{0.1 Hz}	20.0	Speed-dependent switching threshold ● Threshold for automatic switching frequency reduction ● The controller changes automatically to 2 kHz when this value falls below the threshold	📖 8.2-25 📖 8.2-48
C0144 STOP	OH switch	1	0	Switch off	Switch-over is not active		Temperature-dependent switching frequency reduction ● If the heatsink temperature set in C0122 is reached (warning OH4), the controller switches to 2 kHz	
			1	Switch on	Switch-over is active			
C0145 STOP	select ref	1					Selection of the flying restart mode ● Reference speed with which the flying restart process is started	📖 8.2-36 📖 8.2-65
			0	REF: C0011			Maximum speed	
			1	REF: N-ACT			Last current speed	
			2	REF: N-SET			Defined main speed setpoint It is referenced to the setpoint signal at input NSET-N of the function block NSET. If the setpoint signal at input NSET-N is missing, it is referenced to the active JOG setpoint (C0039/x)	
C0146	fly current	0	-500		{1}	500	Flying restart circuit, quantity of current during search process ● Influences the current injection during search process ● ±500 ≈ ±39 % of I_{max} ● The initial value amounts to ≈ 8 % of I_{max}	📖 8.2-36 📖 8.2-65
C0147	fly dt-f	0	-82		{1}	82	Flying restart circuit, search speed during flying restart process ● For drives with great centrifugal masses, reduce the search speed, if required ● ±82 ≙ ±5.0 Hz	
C0148 STOP	ident run	0	0	WRK stop	Ready		Motor data identification 1. Inhibit controller, wait until drive has stopped 2. Enter the correct values of the motor nameplate into C0087, C0088, C0089, C0090, C0091 3. Set C0148 = 1, confirm with ENTER 4. Enable controller The identification – starts, IMP goes off. The motor "whistles" but does not rotate! – lasts approx. 1 ... 2 min – is completed when IMP is lit again 5. Inhibit controller:	📖 6.6-14
			1	WRK run	Start identification			

Code		Possible settings					IMPORTANT	
No.	Name	Lenze	Selection					
C0149 STOP	Auto ident	0	0	Id inactive	Automatic identification is inactive		Automatic motor data identification 1. Inhibit controller, wait until drive has stopped 2. Enter the correct values of the motor nameplate into C0087, C0088, C0089, C0090, C0091 3. Set C0149 = 1, confirm with ENTER 4. Enable controller The identification – starts, IMP goes off. The motor "whistles" but does not rotate! – lasts approx. 1 ... 2 min – is completed when IMP is lit again 5. Inhibit controller:	📖 6.6-14
			1	Id active	Automatic identification is active ● The identification starts automatically after controller enable ● After a faulty identification, the process is restarted after TRIP RESET or mains switching and subsequent controller enable			
C0150	Status word		Bit00	–	Bit08	Status code	Read only Decimal status word for networking via automation interface (AIF) ● Binary interpretation indicates the bit states	See System Manual (extension)
			Bit01	IMP	Bit09	Status code		
			Bit02	–	Bit10	Status code		
			Bit03	–	Bit11	Status code		
			Bit04	–	Bit12	Warning		
			Bit05	–	Bit13	Message		
			Bit06	n = 0	Bit14	–		
			Bit07	CINH	Bit15	–		
C0151	DIS: FDO (DW)						Read only ● Free digital outputs (FDO) ● Hexadecimal representation of the digital output signals configured in C0116 ● Binary interpretation indicates the bit states	See System Manual (extension)
C0155	Status word 2		Bit00	Fail	Bit08	R/L	Display only ● Binary interpretation indicates the bit states	
			Bit01	M_{max}	Bit09	–		
			Bit02	I_{max}	Bit10	–		
			Bit03	IMP	Bit11	–		
			Bit04	RDY	Bit12	–		
			Bit05	CINH	Bit13	–		
			Bit06	TRIP	Bit14	–		
			Bit07	Init	Bit15	–		

Code		Possible settings		IMPORTANT	
No.	Name	Lenze	Selection		
C0156 STOP			📖 Selection list 2	Configuration of digital input signals of function block STAT ● Input signals are output as status messages in C0150, AIF status word and CAN1 status word	See System Manual (extension)
1	CFG: STAT.B0	2000	DCTRL-PAR*1-O		
2	CFG: STAT.B2	5002	MCTRL-IMAX		
3	CFG: STAT.B3	5003	MCTRL-MMAX		
4	CFG: STAT.B4	5050	NSET-RFG I=O		
5	CFG: STAT.B5	10650	CMP1-OUT		
6	CFG: STAT.B14	505	DCTRL-CW/CCW		
7	CFG: STAT.B15	500	DCTRL-RDY		
C0157			0 No status message 1 Status message is output	Digital status signal of function block STAT ● Display of the signals linked in C0156	
1	DIS: STAT.B0				
2	DIS: STAT.B2				
3	DIS: STAT.B3				
4	DIS: STAT.B4				
5	DIS: STAT.B5				
6	DIS: STAT.B14				
7	DIS: STAT.B15				
C0161	Act trip			Display of history buffer "Active fault" ● Keypad: LECOM error number	See System Manual (extension)
C0167	Reset failmem	0	0 Ready 1 Clear history buffer	Clear history buffer ● Active fault messages are not cleared	See System Manual (extension)

Code		Possible settings					IMPORTANT	
No.	Name	Lenze	Selection					
C0168							Display of the fault messages in the history buffer ● Keypad: LECOM error number	See System Manual (extension)
1	Fail no. act						Active fault	
2	Fail no. old1						Last fault	
3	Fail no. old2						Second to last fault	
4	Fail no. old3						Third last fault	
5	Fail no. old4						Fourth-last fault	
6	Fail no. old5						Fifth-last fault	
7	Fail no. old6						Sixth-last fault	
8	Fail no. old7						Last but six fault	
C0169			Display in [s]				Displays at what time the fault (C0168) has occurred since mains connection (C0179) ● If a fault is followed by another fault for several times, only the time of the last occurrence is stored	
1	Failtime act						Active fault	
2	Failtime old1						Last fault	
3	Failtime old2						Second to last fault	
4	Failtime old3						Third last fault	
5	Failtime old4						Fourth-last fault	
6	Failtime old5						Fifth-last fault	
7	Failtime old6						Sixth-last fault	
8	Failtime old7						Last but six fault	
C0170							Displays how many times the fault (C0168) has occurred after the last mains connection	
1	Counter act						Active fault	
2	Counter old1						Last fault	
3	Counter old2						Second to last fault	
4	Counter old3						Third last fault	
5	Counter old4						Fourth-last fault	
6	Counter old5						Fifth-last fault	
7	Counter old6						Sixth-last fault	
8	Counter old7						Last but six fault	
C0173 STOP	UG limit	1					Adaptation of UG thresholds **Check during commissioning and adapt, if necessary!** **All controllers in the system must have the same threshold!**	See System Manual (extension)
				Mains	LU	OU		
			0	< 400 V	285 V	770 ... 755 V	Device with or without brake chopper	
			1	400 V	285 V	770 ... 755 V		
			2	460 V	328 V	770 ... 755 V		
			3	480 V	342 V	770 ... 755 V	Device without brake chopper	
			4	480 V	342 V	800 ... 785 V	Device with brake chopper	
C0178	Op timer				{s}		Display only Total time of the controller enable (X5/28 = HIGH)	
C0179	mainstimer				{s}		Display only Total time of mains ”ON”	

Code		Possible settings				IMPORTANT	
No.	Name	Lenze	Selection				
C0182	Ti S-shaped	20.00	0.01	{0.01 s}	50.00	Integration time of S-shaped ramp function generator, function block NSET ● C0182 = 0.00: ramp function generator operates linearly ● C0182 > 0.00: ramp function generator operates in an S-shape (without jerk)	See System Manual (extension)
C0183	Diagnostics					Diagnostics ● Display only ● If several items or fault or status information are to be shown, the information with the smallest number is displayed	📖 7.2-10
			0	No fault			
			101	Initialisation			
			102	TRIP/fault			
			103	Emergency stop			
			104	IMP message			
			105	Power OFF		Function is not supported	
			111	Operation inhibit via C0135			
			112	Operation inhibit via AIF			
			113	Operation inhibit via CAN			
			121	Controller inhibited via X5/28			
			122	Controller inhibited internally (DCTRL-CINH1)			
			123	Controller inhibited internally (DCTRL-CINH2)			
			124	Controller inhibited via STOP at the keypad			
			125	Controller inhibited via AIF			
			126	Controller inhibited via CAN			
			141	Switch-on inhibit			
			142	Pulse inhibit IMP			
			151	Quick stop via MCTRL-QSP			
			152	Quick stop via STOP at the keypad			
			153	Quick stop via AIF			
			154	Quick stop via CAN			
			161	DC injection braking via terminal			
			162	DC injection braking via C0135			
			163	DC injection braking via AIF			
			164	DC injection braking via CAN			
			170	Motor parameter identification is active			
			250	Warning is active (C0168)			
C0190	NSET arit	0	0	OUT = C46		Arithmetic function, function block NSET Connects main setpoint (C0046) and additional setpoint (C0040)	See System Manual (extension)
			1	C46 + C49			
			2	C46 - C49			
			3	C46 * C49			
			4	C46 / C49			
			5	C46/(100 - C49)			

Code		Possible settings				IMPORTANT	
No.	Name	Lenze	Selection				
C0195	BRK1 T act	99.9	0.0	{0.1 s}	99.9	Brake closing time, function block BRK1 ● C0195 = 99.9 s: infinite ● After the time has elapsed in C0195, the status ”brake applied” is reached	See System Manual (extension)
C0196	BRK1 T release	0.0	0.0	{0.1 s}	60.0	Brake opening time, function block BRK1 ● Opening time can be obtained from the technical data of the brake ● After the time has elapsed in C0196, the status ”brake released” is reached	
C0200	S/W Id		x Main version y Subversion			Software ID ● Display only	
			S9300MVxy000			9300 vector 0.37 ... 90 kW	
			S9300MVxy020			9300 vector 110 ... 400 kW	
C0201	S/W date		xxx yy zzzz	xxx = month yy = day zzzz = year		Software creation ● Display only	
C0202						Internal identification ● Display only	
C0203						Commission number ● Display only	
C0204						Serial number ● Display only	
C0206	Product date		xx/yy/zz			Date of production ● Display only ● xx = day, yy = month, zz = year	
C0207	DL info 1					Download info 1 ● Display only	
C0208	DL info 2					Download info 2 ● Display only	
C0209	DL info 3					Download info 3 ● Display only	
C0220	NSET Tir add	2.00	0.00	{0.01 s}	9999.90	Acceleration time T_{ir} for additional setpoint, function block NSET ● The acceleration time refers to a speed variation of 0 ... C0011	See System Manual (extension)
C0221	NSET Tif add	2.00	0.00	{0.01 s}	9999.90	Deceleration time T_{if} for additional setpoint, function block NSET ● The deceleration time refers to a speed variation of C0011 ... 0	
C0222	PCTRL Vp	1.0	0.1	{0.1 }	500.0	Gain V_p, function block PCTRL1	See System Manual (extension)
C0223	PCTRL1 Tn	400	20	{1 ms}	99999	Integral action component T_n, function block PCTRL1 ● C0223 = 99999 ms: no integral action component	
C0224	PCTRL1 Kd	0.0	0.0	{0.1 }	5.0	Differential component K_d, function block PCTRL1	
C0234	damp value	20	-100	{1 %}	100	Influence of the oscillation damping, function block MCTRL ● Minimising a tendency to oscillation of the drive ● Influences the tendency to oscillation of the drive ● When C0025 >1 and C0006 = 1, C0234 is set to 0	📖 8.2-25 📖 8.2-48

Code		Possible settings				IMPORTANT	
No.	Name	Lenze	Selection				
C0235	damping	5	1	{1 ms}	600	Filter time of the oscillation damping, function block MCTRL ● Filter time for the internal signal for oscillation damping	📖 8.2-25 📖 8.2-48
C0236	damp limit	0.2	0.0	{0.1 Hz}	20.0	Limit value of oscillation damping, function block MCTRL ● Limit value for the internal signal of oscillation damping	
C0241	Cmp-RFG-I=0	1.00	0.00	{0.01 %}	100.00	Speed threshold in [%] for the digital output NSET-controller enable-I=0, function block NSET ● The analog signals NSET-NOUT (without arithmetic and limiting functions) and NSET-controller enable-I are compared ● NSET-controller enable-I=0 = HIGH: the differential signal between NSET-NOUT and NSET-controller enable-I falls below the value in C0241 ● C0241 = 100 %: n_{max}	See System Manual (extension)
C0244	BRK1 M set	0.00	0.00	{0.01 %}	100.00	Holding torque, function block BRK1 ● C0244 = 100 % = C0057	See System Manual (extension)
C0250	FCODE 1 Bit	0	0		1	Free control code FCODE250	
C0252	Angle offset	0	-245760000	{1 inc.}	245760000	Phase offset for master frequency processing, function block DFSET ● Fixed phase offset for digital frequency configuration ● 1 rev. = 65536 inc	📖 8.2-18
C0253	Angle n-trim	→	-32767	{1 inc.}	32767	Speed-dependent phase trimming for the master frequency processing, function block DFSET → depending on C0005, C0025, C0490 ● Change of C0005, C0025 or C0490 resets C0253 to the corresponding Lenze setting ● 1 rev. = 65536 inc ● Value in C0253 is reached at 15000 rpm	

Code		Possible settings				IMPORTANT	
No.	Name	Lenze	Selection				
C0260	MPOT1 high	100.00	-199.99	{0.01 %}	199.99	Upper limit, function block MPOT1 ● Condition: C0260 > C0261	See System Manual (extension)
C0261	MPOT1 low	-100.0	-199.99	{0.01 %}	199.99	Lower limit, function block MPOT1 ● Condition: C0261 < C0260	
C0262	MPOT1 TIR	10.0	0.1	{0.1 s}	6000.0	Acceleration time T_{ir}, function block MPOT1 ● The set time refers to a change of 0 ... 100 %	
C0263	MPOT1 Tif	10.0	0.1	{0.1 s}	6000.0	Deceleration time T_{if}, function block MPOT1 Motor potentiometer ● The set time refers to a change of 100 ... 0 %	
C0264	MPOT1 on/off	0	0	no change		Deactivation of motor potentiometer, function block MPOT1 ● Function is executed when MPOT1-INACT = HIGH	
			1	Deceleration with T_{if} to 0%			
			2	Deceleration with T_{if} to C0261			
			3	Jump with T_{if} = 0 to 0%			
			4	Jump with T_{if} = 0 to C0261			
			5	Acceleration with T_{ir} to C0260			
C0265	MPOT1 init	0	0	Value of MPOT1 when mains fails		Initialisation of motor potentiometer, function block MPOT1 ● Starting value which is to be accepted during mains switching and activated motor potentiometer	
			1	lower limit of C0261			
			2	0 %			
C0267 STOP					🕮 Selection list 2	Configuration of digital input signals, function block MPOT	See System Manual (extension)
1	CFG: UP	1000	FIXED0			UP / DOWN / MPOT1-OUT 0 / 0 / — 0 / 1 / ↓ 1 / 0 / ↑ 1 / 1 / — ↑: Output signal runs to the upper limit value ↓: Output signal runs to the lower limit value —: Output signal is unchanged	
2	CFG: DOWN	1000	FIXED0				
C0268 STOP	CFG: INACT	1000	FIXED0		🕮 Selection list 2	Configuration of digital input signal, function block MPOT ● HIGH: motor potentiometer is not active. Output signal runs to 0	
C0269						Digital input signals, function block MPOT ● Display of the signals linked in C0267 and C0268	
1	DIS: UP						
2	DIS: DOWN						
3	DIS: INACT						

Code		Possible settings				IMPORTANT	
No.	Name	Lenze	Selection				
C0325	Vp2 adapt	1.0	0.1	{0.1 }	500.0	Function block PTCTRL1 ● Adaptation of gain V_{p2}	See System Manual (extension)
C0326	Vp3 adapt	1.0	0.1	{0.1 }	500.0	Function block PTCTRL1 ● Adaptation of gain V_{p3}	
C0327	Set2 adapt	100.00	0.00	{0.01 %}	100.00	Function block PTCTRL1 ● Adaptation of setpoint speed threshold n_{set2} ● Condition: C0327 > C0328	
C0328	Set1 adapt	0.00	0.00	{0.01 %}	100.00	Function block PTCTRL1 ● Adaptation of setpoint speed threshold n_{set1} ● Condition: C0328 < C0327	
C0329	Adapt on/off	0	0	No adaptation of the process controller		Function block PTCTRL1 ● Adaptation On/Off	
			1	External adaptation via input			
			2	Adaptation via setpoint			
			3	Adaptation via control difference			
C0332	PCTRL Tir	0	0	{1 s}	10000	Acceleration time T_{ir}, function block PCTRL1 ● The acceleration time refers to a setpoint change of 0 ... 100 %	See System Manual (extension)
C0333	PCTRL1 Tif	0	0	{1 s}	10000	Deceleration time T_{if}, function block PCTRL1 ● The deceleration time refers to a setpoint change of 100 % ... 0	
C0336	DIS: act Up		0.0	{0.1 }	500.0	Current gain V_p, function block PCTRL1 ● Read only	See System Manual (extension)
C0337	Bi/unipolar	0				Sphere of action, function block PCTRL1	
			0	Bipolar		● Output value is limited to -100 ... 100 %	
			1	Unipolar		● Output value is limited to 0 ... 100 %	
C0338	ARIT1 funct	1	0	OUT = IN1		Selection of function, function block ARIT1	See System Manual (extension)
			1	OUT = IN1 + IN2			
			2	OUT = IN1 - IN2			
			3	OUT = IN1 * IN2			
			4	OUT = IN1 / IN2			
			5	OUT = IN1 / (100 - IN2)			
C0339 STOP					📖 Selection list 1	Configuration of analog input signals, function block ARIT1	
1	CFG: IN	1000	FIXED0%			ARIT1-IN1	
2	CFG: IN	1000	FIXED0%			ARIT1-IN2	
C0340			-199.99	{0.01 %}	199.99	Function block ARIT1 ● Display of the signals linked in C0339	
1	DIS: IN					ARIT1-IN1	
2	DIS: IN					ARIT1-IN2	
C0350	CAN address	1	1	{1}	63	System bus node address ● Change is effective after "Reset node" command	
C0351	CAN baudrate	0	0	500 kbit/s		System bus baud rate ● Change is effective after "Reset node" command	
			1	250 kbit/s			
			2	125 kbit/s			
			3	50 kbit/s			
			4	1000 kbit/s			

Code		Possible settings				IMPORTANT
No.	Name	Lenze	Selection			
C0352	CAN mst	0	0	Slave		Configuration of the system bus nodes ● Change is effective after ”Reset node” command
			1	Master		
C0353			0	C0350 is the source		Source of the system bus address
			1	C0354 is the source		
1	CAN addr sel1	0				CAN IN1, CAN-OUT1
2	CAN addr sel2	0				CAN IN2, CAN-OUT2
3	CAN addr sel3	0				CAN IN3, CAN-OUT3
C0354			1	{1}	512	Selective system bus address ● Individual addressing of the system bus process data objects
1	IN1 addr 2	129				CAN-IN1
2	OUT1 addr 2	1				CAN-OUT2
3	IN2 addr 2	257				CAN-IN2
4	OUT2 addr 2	258				CAN-OUT2
5	IN3 addr 2	385				CAN-IN3
6	OUT3 addr 2	386				CAN-OUT3
C0355			0	{1}	2047	System bus identifier ● Read only
1	CAN-IN1 Id					
2	CAN-OUT1 Id					
3	CAN-IN2 Id					
4	CAN-OUT2 Id					
5	CAN-IN3 Id					
6	CAN-OUT3 Id					
C0356			0	{1 ms}	65000	System bus time settings
1	CAN boot-up	3000				Required for CAN interconnection without master
2	OUT2 cycle	0				0 = event-controlled process data transfer >0 = cyclic process data transfer
3	OUT3 cycle	0				
4	CAN delay	20				When the NMT state ”Operational” (after ”Pre-operational” or ”Stopped”) has been reached, the delay time ”CANdelay” is started. After the delay time has e;apsed, the PDO’s CAN-OUT2 and CAN-OUT3 are sent for the first time.
C0357			0	{1 ms}	65000	System bus monitoring times ● After a fault message, the CAN objects remain in receive mode
1	CE1monit time	3000				CAN-IN1
2	CE2monit time	3000				CAN-IN2
3	CE3monit time	3000				CAN-IN3
C0358	Reset node	0	0	No function		Set the nodal reset pointof the system bus
			1	CAN reset		
C0359	CAN state		0	Operational		System bus status ● Read only
			1	Pre-operational		
			2	Warning		
			3	Bus off		

Code		Possible settings				IMPORTANT
No.	Name	Lenze	Selection			
C0360			0		65535	Telegram counter ● Read only ● For count values > 65535 the counter starts at 0
1	Message OUT					All telegrams sent
2	Message IN					All telegrams received
3	Message OUT1					Telegrams sent on CAN-OUT1
4	Message OUT2					Telegrams sent on CAN-OUT2
5	Message OUT3					Telegrams sent on CAN-OUT3
6	Message POUT1					Telegrams sent on parameter channel1
7	Message POUT2					Telegrams sent on parameter channel2
8	Message IN1					Telegrams received from CAN-IN1
9	Message IN2					Telegrams received from CAN-IN2
10	Message IN3					Telegrams received from CAN-IN3
11	Message PIN1					Telegrams received from parameter channel1
12	Message PIN2					Telegrams received from parameter channel2
C0361			0	{1 %}	100	System bus load ● Read only ● For a perfect operation, the entire bus load (all nodes connected) should be less than 80 %
1	Load OUT					All telegrams sent
2	Load IN					All telegrams received
3	Load OUT1					Telegrams sent on CAN-OUT1
4	Load OUT2					Telegrams sent on CAN-OUT2
5	Load OUT3					Telegrams sent on CAN-OUT3
6	Load POUT1					Telegrams sent on parameter channel1
7	Load POUT2					Telegrams sent on parameter channel2
8	Load IN1					Telegrams received from CAN-IN1
9	Load IN2					Telegrams received from CAN-IN2
10	Load IN3					Telegrams received from CAN-IN3
11	Load PIN1					Telegrams received from parameter channel1
12	Load PIN2					Telegrams received from parameter channel2
C0364 STOP	CFG: CAN activ	1000	FIXED0		📖 Selection list 2	Configuration - digital input signal ● Switches the system bus via the external signal from ”Pre-Operational” to ”Operational”
C0365	DIS:CAN activ		0	Pre-Operational		System bus state ● Display only
			1	Operational		
C0366	Sync Response	1	0	No response		Response to sync telegram of the master
			1	Response		
C0367	Sync Rx ID	128	1	{1}	256	Receipt identifier (Rx) ● Sync Identifier for grouping for data transfer to CAN-IN1

Code		Possible settings					IMPORTANT	
No.	Name	Lenze	Selection					
C0368	Sync Tx ID	128	1	{1}		256	Transmission identifier (Tx) ● Identifier for generating a sync telegram	
C0369	Sync Tx Time	0	0	{1}		65000	Sync transmission time (Tx) ● Transmission interval for the object set in C0368	
C0400	DIS: OUT		-199.99	{0.01 %}		199.99	Analog output signal, function block AIN1 ● Read only	See System Manual (extension)
C0402 STOP	CFG: OFFSET	19502	FCODE-26/1		🕮 Selection list 1		Configuration offset, function block AIN1 ● The offset is added to the input signal at AIN1-IN	
C0403 STOP	CFG: GAIN	19504	FCODE-27/1		🕮 Selection list 1		Configuration of gain, function block AIN1 ● The gain is multiplied by the input signal at AIN1-IN	
C0404			-199.99	{0.01 %}		199.99	Function block AIN1 ● Display of the signals linked in C0402 and C0404	
1	DIS: OFFSET							
2	DIS: GAIN							
C0405	DIS: OUT		-199.99	{0.01 %}		199.99	Analog output signal, function block AIN2 ● Read only	See System Manual (extension)
C0407 STOP	CFG: OFFSET	19503	FCODE-26/2		🕮 Selection list 1		Configuration of offset, function block AIN2 ● The offset is added to the input signal at AIN2-IN	
C0408 STOP	CFG: GAIN	19505	FCODE-27/2		🕮 Selection list 1		Configuration of gain, function block AIN2 ● The gain is multiplied by the input signal at AIN2-IN	
C0409			-199.99	{0.01 %}		199.99	Function block AIN2 ● Display of the signals linked in C0407 and C0408	
1	DIS: OFFSET							
2	DIS: GAIN							
C0420 STOP	Encoder const	512	1	{1 inc/rev}		8192	Number of increments for incremental encoder at X8 or X9 ● Connect incremental encoders with HTL-level on X9 only	🕮 6.7-1
C0421 STOP	Enc voltage	5.00	5.00	{0.1 V}		8.00	Supply voltage for the incremental encoder at X8 **CAUTION! A wrong entry can destroy the incremental encoder!**	

Code		Possible settings				IMPORTANT	
No.	Name	Lenze	Selection				
C0425	DFIN const	3	0	256 inc/rev		Constant of the master frequency input, function block DFIN ● Output signal at the connected encoder or at the upstream controller in the event of a master frequency cascade/master frequency bus	📖 8.2-5
			1	512 inc/rev			
			2	1024 inc/rev			
			3	2048 inc/rev			
			4	4096 inc/rev			
			5	8192 inc/rev			
			6	16384 inc/rev			
C0426	DIS: OUT		-36000	{1 rpm}	36000	Output signal of the master frequency input, function block DFIN ● Display only	
C0427	DFIN function	0				Function of the master frequency input, function block DFIN	
			0	2-phase		● Phase-displaced signal sequence	
			1	A pulse/B dir		● Control of direction of rotation via track B	
			2	Pulse A or B		● Control of speed and direction of rotation via track A or track B	
C0431 STOP	CFG: IN	5001	MCTRL-NACT		📖 Selection list 1	Configuration of analog input signal, function block AOUT1 ● Signal at AOUT1-IN is output to terminal X6/62	See System Manual (extension)
C0432 STOP	CFG: OFFSET	19512	FCODE-109/1		📖 Selection list 1	Configuration of offset, function block AOUT1 ● the offset is added to the input signal at AOUT1-IN	
C0433 STOP	CFG: GAIN	19510	FCODE-108/1		📖 Selection list 1	Configuration of gain, function block AOUT1 ● The gain is multiplied by the input signal at AOUT1-IN	
C0434			-199.99	{0.01 %}	199.99	Function block AOUT1 ● Display of the signals linked in C0431, C0432 and C0433	
1	DIS: IN						
2	DIS: OFFSET						
3	DIS: GAIN						
C0436 STOP	CFG: IN	5002	MCTRL-MSET2		📖 Selection list 1	Configuration of analog input signal, function block AOUT2 ● Signal at AOUT2-IN is output to terminal X6/63	See System Manual (extension)
C0437 STOP	CFG: OFFSET	19513	FCODE-109/2		📖 Selection list 1	Configuration of offset, function block AOUT2 ● The offset is added to the input signal at AOUT2-IN	
C0438 STOP	CFG: GAIN	19511	FCODE-108/2		📖 Selection list 1	Configuration of gain, function block AOUT2 ● The gain is multiplied by the input signal at AOUT2-IN	
C0439			-199.99	{0.01 %}	199.99	Function block AOUT2 ● Display of the signals linked in C0436, C0437 and C0438	
1	DIS: IN						
2	DIS: OFFSET						
3	DIS: GAIN						

Code		Possible settings				IMPORTANT	
No.	Name	Lenze	Selection				
C0443	DIS: DIGIN-OUT		0	{1}	255	Terminal signals, function block DIGIN ● Read only ● Binary interpretation of the terminal signals at X5	See System Manual (extension)
			Bit	Assignment			
			0	DIGIN1		X5/E1	
			1	DIGIN2		X5/E2	
			2	DIGIN3		X5/E3	
			3	DIGIN4		X5/E4	
			4	DIGIN5		X5/E5	
			5	ST-DIGIN6		X5/ST	
			6	DIGIN-CINH		X5/28	
C0444			0 1	LOW signal HIGH signal		Terminal signals, function block DIGOUT ● Read only	See System Manual (extension)
	DIS: DIGOUT1		Bit	Assignment		X5/A1	
	DIS: DIGOUT2		0	DIGIN1		X5/A2	
	DIS: DIGOUT3		1	DIGIN2		X5/A3	
	DIS: DIGOUT4		2	DIGIN3		X5/A4	
C0450 STOP	CFG: NX	1000	FIXED0%		📖 Selection list 1	Configuration of analog input signal, function block BRK1 ● Speed threshold, from which the drive may output the signal "Close brake"	See System Manual (extension)
C0451 STOP	CFG: SET	1000	FIXED0		📖 Selection list 2	Configuration of digital input signal, function block BRK1 ● HIGH = close brake ● LOW = open brake	
C0452 STOP	CFG: SIGN	1000	FIXED0%		📖 Selection list 1	Configuration of analog input signal, function block BRK1 ● Direction of torque with which the drive is to create a torque against the brake	
C0458			-199.99	{0.01 %}	199.99	Function block BRK1 ● Display of the signals linked in C0450 and C0452	See System Manual (extension)
1	DIS: NX						
2	DIS: SIGN						
C0459	DIS: ON					Function block BRK1 ● Display of the signal linked in C0451	
C0464	Customer I/F		0	original		Customer interface indicates the status of the selected basic configuration ● Reassignment of terminals in a basic configuration does not change C0005 and sets C0464 = 1 ● Adding or removing function blocks or changing the signal flow among the function blocks in a basic configuration sets C0005 = 0 and C0464= 1	
			1	changed			

Code		Possible settings					IMPORTANT
No.	Name	Lenze	Selection				
C0465 STOP		→				🕮 Selection list 5	Function block - processing list ● Defining the sequence in which the function blocks are to be processed internally → Depending on C0005. Changing C0005 loads assigned processing list → The displayed values apply to C0005 = 1000 ● After changing the signal flow, adapt the processing list in any case. Otherwise the controller may use the wrong signals! ● The function blocks DIGIN, DIGOUT, AIF-IN, CAN-IN, and MCTRL are always processed and do not have to be entered in the list
1	FB list	200	DFIN				
2	FB list	0					
3	FB list	50	AIN1				
4	FB list	0					
5	FB list	0					
6	FB list	55	AIN2				
7	FB list	0					
8	FB list	0					
9	FB list	10250	R/L/Q				
10	FB list	0					
...	...	0					
14	FB list	0					
15	FB list	5250	NLIM1				
16	FB list	5050	NSET				
...	...	0					
19	FB list	5700	ANEG1				
...	...	0					
22	FB list	10650	CMP1				
...	...	0					
25	FB list	70	AOUT1				
...	...	0					
28	FB list	75	AOUT2				
...	...	0					
31	FB list	250	DFOUT				
...	...	0					
41	FB list	25000	AIF-OUT				
42	FB list	20000	CAN-OUT				
...	...	...					
50	FB list	0					
C0466	CPU T remain						Remaining process time for processing the function blocks ● Display only
C0469 STOP	Fct STP key	2	0	inactive		Inactive	Determines the function which is released when pressing STOP on the keypad **Changes are only active after mains connection!**
			1	CINH		Inhibit controller:	
			2	qsp		Quick stop	
C0470			0		{1}	255	Configuration of free control codes for digital signals ● The data words C0470 and C0471 are in parallel and are identical.
1	FCODE 8 Bit	0					FCODE bit 0-7
2	FCODE 8 Bit	0					FCODE bit 8-15
3	FCODE 8 Bit	0					FCODE bit 16-23
4	FCODE 8 Bit	0					FCODE bit 24-31
C0471	Configuration of input FCODE 32 Bit	0	0		{1}	4294967296	Free control code for digital signals ● The data words C0470 and C0471 are in parallel and are identical.

Code		Possible settings				IMPORTANT	
No.	Name	Lenze	Selection				
C0472			-199.99	{0.01 %}	199.99	Configuration of free control codes for analog signals	
1	FCODE analog	0.00					
2	FCODE analog	0.00					
3	FCODE analog	100.00					
6	FCODE analog	0.00					
...	...	0.00					
20	FCODE analog	0.00					
C0473			-32767	{1}	32767	Configuration of free control codes for absolute analog signals	
1	FCODE abs	1					
2	FCODE abs	1					
3	FCODE abs	0					
...	...	0					
10	FCODE abs	0					
C0474			-2147483647	{1}	2147483647	Configuration of free control codes for phase signals ● 1 rev. = 65536 inc	
1	FCODE PH	0					
...	...	0					
5	FCODE PH	0					
C0475			-16000	{1}	16000	Configuration of free control codes for phase difference signals ● 1 rev. = 65536 inc	
1	FCODE DF	0					
2	FCODE DF	0					
C0497	Nact filter	2.0	0.0	{0.1 ms}	50.0	Filter time constant N_{act} for actual speed value, function block MCTRL2 ● Internal filtering of the speed signal for control ● C0497 = 0 ms: Switched off	📖 8.2-48
C0510 STOP	CFG: IN1	50	AIN1-OUT		📖 Selection list 1	Configuration of analog input signal, function block NLIM1 ● Input for analog speed setpoint	See System Manual (extension)
C0511	DIS: IN1		-199.99	{0.01 %}	199.99	Function block NLIM1 ● Display of the input signal configured in C0510	

Code		Possible settings		IMPORTANT
No.	Name	Lenze	Selection	
C0517 ENTER			0.00 {0.01 } 1999.00	● The user menu contains in the Lenze setting the most important codes for commissioning the operating mode ”V/f characteristic control ● With an active password protection only the codes entered in C0517 can be freely accessed ● Enter the numbers of the required codes in the subcodes ● The input is done in the format xxx.yy – xxx: Code number – yy: Subcode number ● It is not checked whether the entered code exists.
1	User menu	51.00	Actual speed value (MCTRL-NACT)	
2	User menu	54.00	Actual motor current (MCTRL-IACT)	
3	User menu	56.00	Torque setpoint (MCTRL-MSET2)	
4	User menu	64.00	Device utilisation I×t	
5	User menu	183.00	Diagnostics	
6	User menu	168.01	History buffer	
7	User menu	39.01	JOG-setpoints 1 (NSET)	
8	User menu	86.00	Motor type selection	
9	User menu	148.00	Identifying motor parameters	
10	User menu	22.00	I_{max} limit in motor mode	
11	User menu	23.00	I_{max} limit in generator mode	
12	User menu	11.00	Maximum speed N_{max}	
13	User menu	12.00	Acceleration time T_{ir} main setpoint	
14	User menu	13.00	Deceleration time T_{if} main setpoint	
15	User menu	16.00	U_{min} boost	
16	User menu	70.00	Gain V_p speed controller	
17	User menu	71.00	Integral-action time T_n speed controller	
18	User menu	75.00	Gain V_p current controller	
19	User menu	76.00	Integral-action time T_n current controller	
20	User menu	142.00	Starting condition	
21	User menu	92.00	Motor stator inductance	
22	User menu	36.00	DC braking current	
23	User menu	93.00	Controller identification	
24	User menu	99.00	Software version	
...	...	0	Not assigned	
31	User menu	94.00	Password	
32	User menu	3.00	Save parameter set	

Code		Possible settings			IMPORTANT	
No.	Name	Lenze	Selection			
C0520 STOP	CFG: IN	1000	FIXEDPHI-0	🕮 Selection list 4	Configuration of input signal, function block DFSET ● Input of speed / phase setpoint signal	🕮 8.2-18
C0521 STOP	CFG: VP-DIV	1000	FIXED0%	🕮 Selection list 1	Configuration of analog input signal, function block DFSET ● Signal for numerator of stretching factor ● 100 % = 16384 inc	
C0522 STOP	CFG: RAT-DIV	1000	FIXED0%	🕮 Selection list 1	Configuration of analog input signal, function block DFSET ● Signal for numerator of gearbox factor ● 100 % = 16384 inc	
C0523 STOP	CFG: A-TRIM	1000	FIXED0%	🕮 Selection list 1	Configuration of analog input signal, function block DFSET ● Signal for phase trimming via offset multiplier (C0529) ● 100 % = 16384 inc	
C0524 STOP	CFG: N-TRIM	1000	FIXED0%	🕮 Selection list 1	Configuration of analog input signal, function block DFSET ● Signal for speed trimming ● Signal in [%] of C0011	
C0525 STOP	CFG: 0-PULSE	1000	FIXED0	🕮 Selection list 2	Configuration of digital input signal, function block DFSET ● Signal for one-time zero pulse activation ● HIGH = release for zero pulse synchronisation	
C0526 STOP	CFG: RESET	1000	FIXED0	🕮 Selection list 2	Configuration of digital input signal, function block DFSET ● Signal for reset of integrators ● HIGH sets – Position difference = 0 – DFSET-PSET = 0 – DFSET-PSET2 = 0	
C0527 STOP	CFG: SET	1000	FIXED0	🕮 Selection list 2	Configuration of digital input signal, function block DFSET ● HIGH = Set phase integrators to equal values ● LOW-HIGH edge sets DFSET-PSET = 0 ● HIGH-LOW edge sets DFSET-PSET to the current value of MCTRL-PHI-SET ● DFSET-SET has a higher priority than DFSET-RESET	
C0528			$-2 \cdot 10^9$	{1} $2 \cdot 10^9$	Function block DFSET ● Display only	🕮 8.2-18
1	DIS: 0-pulse A				Phase difference between two zero pulses	
2	DIS: Offset				Offset = C0523 × C0529 + C0252	

Code		Possible settings					IMPORTANT	
No.	Name	Lenze	Selection					
C0529	Multip offset	1	-20000		{1}	20000	Offset multiplier, function block DFSET ● Multiplier for the phase offset (C0252)	📖 8.2-18
C0530	DF evaluation	0	0	with factor		With gearbox factor	Master frequency evaluation, function block DFSET ● Evaluation of the setpoint integrator	
			1	no factor		Without gearbox factor		
C0531	Act 0 div	1	1		{1}	16384	Actual zero pulse divisor, function block DFSET	
C0532	0-pulse/TP	1	1	0-pulse		Index pulse	Zero pulse / touch probe, function block DFSET ● Zero pulse of the feedback system or touch probe	
			2	Touch probe		Touch probe		
C0533	Vp denom	1	1		{1}	32767	Gain factor of denominator V_p, function block DFSET	
C0534	0 pulse fct	0					Zero pulse function, function block DFSET ● Synchronising the drive	📖 8.2-18
			0	inactive		Inactive		
			1	Continuous		Continuous synchronisation, correction in the shortest possible way		
			2	Cont. switch		Continuous synchronisation, correction in the shortest possible way	After a LOW-HIGH signal to DFSET-0-pulse, the zero track is synchronised once	
			10	Once, fast way		One-time synchronisation, correction in the shortest possible way		
			11	Once, CW		One-time synchronisation, correction in direction of rotation to the right		
			12	Once, CCW		One-time synchronisation, correction in direction of rotation to the left		
			13	Once, 2*0-pulse		One-time synchronisation, correction is detected from setpoint pulse and actual pulse and corrected to the corresponding direction		
C0535	Set 0 div	1	1		{1}	16384	Desired zero pulse divisor, function block DFSET	📖 8.2-18

Code		Possible settings					IMPORTANT	
No.	Name	Lenze	Selection					
C0536			-32767	{1}		32767	Function block DFSET ● Display of the signals linked in C0521, C0522 and C0523	📖 8.2-18
1	DIS: VP-DIV							
2	DIS: RAT-DIV							
3	DIS: A-TRIM							
C0537	DIS: N-TRIM		-199.99	{0.01 %}		199.99	Function block DFSET ● Display of the signal linked in C0524	
C0538			0			1	Function block DFSET ● Display of the signals linked in C0525, C0526 and C0527	
1	DIS: 0-pulse							
2	DIS: RESET							
3	DIS: SET							
C0539	DIS: IN		-6000	{1 rpm}		6000	Function block DFSET ● Display of the signal linked in C0520	
C0540 STOP	Function	0					Function selection, function block DFOUT ● Output signal at X10	📖 8.2-8
			0	Analog input	Analog input		Signal at DFOUT-AN-IN is output. Zero track can be input externally.	
			1	PH diff input	Phase difference input		Signal at DFOUT-DF-IN is output. Zero track can be input externally.	
			2		Not assigned			
			3		Not assigned			
			4	X10 = X9	X9 is output on X10		The input signals are buffered C0030 is without function	
			5	X10 = X8	X8 is output on X10			
C0541 STOP	CFG: AN-IN	5001	MCTRL-NACT		📖 Selection list 1		Configuration of analog input signal, function block DFOUT ● Signal in [%] of C0011	
C0542 STOP	CFG: DF-IN	1000	FIXEDPHI-0		📖 Selection list 4		Configuration of input signal, function block DFOUT ● Speed signal	
C0544 STOP	CFG: SYN-RDY	1000	FIXED0		📖 Selection list 2		Configuration of digital input signal, function block DFOUT ● DFOUT-SYN-RDY = HIGH: Generating a zero pulse	
C0545	PH offset	0	0	{1 inc.}		65535	Phase offset, function block DFOUT ● Displacing the zero pulse generated via DFOUT-SYN-RDY by up to 360 ° ● 1 rev. = 65535 inc (360 °)	
C0546	Min inc/rev	1000	1	{1 inc.}		2147483647	Masking of the touch probe signal, function block DFSET ● Suppressing interference pulses at X5/E4 (actual pulse of touch probe signal) ● The size of the masking window between two actual pulses is set	📖 8.2-18

Code		Possible settings					IMPORTANT	
No.	Name	Lenze	Selection					
C0547	DIS: AN-IN		-199.99	{0.01 %}		199.99	Function block DFOUT ● Display of the signal linked in C0541	📖 8.2-8
C0548	DIS: SYN-RDY		0			1	Function block DFOUT ● Display of the signal linked in C0544	
C0549	DIS: DF-IN		-32767	{1 rpm}		32767	Function block DFOUT ● Display of the signal linked in C0542	
C0560			-199.99	{0.01 %}		199.99	Configuration of fixed setpoints, function block FIXSET1 ● Output of the setpoints to FIXSET1-OUT via binary coding of the inputs FIXSET1-IN1 ... FIXST1-IN4	See System Manual (extension)
1	Fix set-value	100						
2	Fix set-value	75						
3	Fix set-value	50						
4	Fix set-value	25						
5	Fix set-value	0						
...	...	0						
15	Fix set-value	0						
C0561 STOP	CFG: AIN	1000	FIXED0%			📖 Selection list 1	Configuration of analog input signal, function block FIXSET1 ● The analog input signal is switched to FIXSET1-OUT if all inputs FIXSET-INx = LOW	
C0562 STOP						📖 Selection list 2	Configuration of digital input signals, function block FIXSET1 ● The number of inputs to be assigned depend on the number of the fixed setpoints required.	
1	CFG: IN	1000	FIXED0				FIXSET1-IN1	
2	CFG: IN	1000	FIXED0				FIXSET1-IN2	
3	CFG: IN	1000	FIXED0				FIXSET1-IN3	
4	CFG: IN	1000	FIXED0				FIXSET1-IN4	
C0563	DIS: AIN		-199.99	{0.01 %}		199.99	Function block FIXSET1 ● Display of the signal linked in C0561	
C0564			0			1	Function block FIXSET1 ● Display of the signals linked in C0562/1, C0562/2, C0562/3 and C0562/4	
1	DIS: IN						FIXSET1-IN1	
2	DIS: IN						FIXSET1-IN2	
3	DIS: IN						FIXSET1-IN3	
4	DIS: IN						FIXSET1-IN4	
C0570 STOP	CFG: IN	1000	FIXED0%			📖 Selection list 1	Configuration of analog input signal, function block S&H1	See System Manual (extension)
C0571 STOP	CFG: LOAD	1000	FIXED0			📖 Selection list 2	Configuration of digital input signal, function block S&H1	
C0572	DIS: IN		-199.99	{0.01 %}		199.99	Function block S&H1 ● Display of the signal linked in C0570	
C0573	DIS: LOAD		0			1	Function block S&H1 ● Display of the signal linked in C0571	
C0574	MONIT OC2	0	0	TRIP			Configuration of monitoring OC2, earth fault	See System Manual (extension)
			3	Off				

Code		Possible settings			IMPORTANT	
No.	Name	Lenze	Selection			
C0581	MONIT EEr	0	0	TRIP	Configuration monitoring EEr, external fault	See System Manual (extension)
			1	Message		
			2	Warning		
			3	Off		
C0582	MONIT OH4	2	2	Warning	Configuration monitoring OH4, heatsink temperature ● The operating temperature can be set in C0122	See System Manual (extension)
			3	Off		
C0583	MONIT OH3	3	0	TRIP	Configuration of motor temperature monitoring with fixed operating temperature ● Only for KTY at X8 ● The operating temperature is fixed at 150 °C	📖 6.6-10 See System Manual (extension)
			2	Warning		
			3	Off		
C0584	MONIT OH7	3	2	Warning	Configuration of monitoring motor temperature with variable operating temperature ● Only for KTY at X8 ● When reaching the temperature set in C0121 the warning OH7 is activated	📖 6.6-10 See System Manual (extension)
			3	Off		
C0585	MONIT OH8	3	0	TRIP	Configuration of motor temperature monitoring ● Temperature monitoring via PTC input (T1, T2)	📖 6.6-8 See System Manual (extension)
			2	Warning		
			3	Off		
C0587	MONIT SD3	3	0	TRIP	Configuration of monitoring SD3, encoder at X9 ● Monitors the voltage supply at X9/pin 8	See System Manual (extension)
			2	Warning		
			3	Off		
C0588	MONIT H10/H11	0	0	TRIP	Configuration of monitoring H10 and H11, thermal sensors in the controller ● H10: Sensor error - heatsink temperature ● H11: Sensor error - interior temperature	See System Manual (extension)
			3	Off		
C0591	MONIT CE1	3	0	TRIP	Configuration of monitoring CE1, communication error at CAN-IN1	See System Manual (extension)
			2	Warning		
			3	Off		
C0592	MONIT CE2	3	0	TRIP	Configuration of monitoring CE2, communication error at CAN-IN2	
			2	Warning		
			3	Off		
C0593	MONIT CE3	3	0	TRIP	Configuration of monitoring CE3, communication error at CAN-IN3	
			2	Warning		
			3	Off		

Code		Possible settings				IMPORTANT	
No.	Name	Lenze	Selection				
C0594	MONIT SD6	3	0	TRIP		Activation of the motor temperature monitoring with KTY at X8 ● Use C0594 = 0 or 2 to activate monitoring ● In case of a short circuit or interruption at X8/5 and X8/8 the fault message SD6 is activated ● Configuration of the response when exceeding the motor temperature – Fixed operating temperature in C0583 – Variable operating temperature in C0584	📖 6.6-10 See System Manual (extension)
			2	Warning			
			3	Off			
C0595	MONIT CE4	3	0	TRIP		Configuration of monitoring CE4, BUS-OFF (system bus)	See System Manual (extension)
			2	Warning			
			3	Off			
C0596	NMAX limit	4000	0	{1 rpm}	36000	Configuration of monitoring N_{max}, maximum system speed exceeded	See System Manual (extension)
C0597	MONIT LP1	3	0	TRIP		Configuration of monitoring the motor phases LP1	See System Manual (extension)
			2	Warning			
			3	Off			
C0598	MONIT SD5	3	0	TRIP		Configuration of monitoring SD5, open circuit at analog input X6/1, X6/2	See System Manual (extension)
			2	Warning			
			3	Off			
C0599	Limit LP1	5.0	1.0	{0.1 %}	10.0	Configuration of current limit LP1, current limit value for monitoring the motor phases in C0597	See System Manual (extension)
C0600	Function	1	0	OUT = IN1		Function selection, function block ARIT2	See System Manual (extension)
			1	OUT = IN1 + IN2			
			2	OUT = IN1 - IN2			
			3	OUT = IN1 * IN2			
			4	OUT = IN1 / IN2			
			5	OUT = IN1 / (100 - IN2)			
C0601 STOP			📖 Selection list 1			Configuration of analog input signal, function block ARIT2	
1	CFG: IN	1000	FIXED0%			ARIT2-IN1	
2	CFG: IN	1000	FIXED0%			ARIT2-IN2	
C0602			-199.99	{0.01 %}	199.99	Function block ARIT2 ● Display of the signals linked in C0601	
1	DIS: IN					ARIT2-IN1	
2	DIS: IN					ARIT2-IN2	

Code		Possible settings					IMPORTANT	
No.	Name	Lenze	Selection					
C0603	Function	1	0	OUT = IN1			Function selection, function block ARIT3	See System Manual (extension)
			1	OUT = IN1 + IN2				
			2	OUT = IN1 - IN2				
			3	OUT = IN1 * IN2				
			4	OUT = IN1 / IN2				
			5	OUT = IN1 / (100 - IN2)				
C0604 STOP						📖 Selection list 1	Configuration of analog input signal, function block ARIT3	
1	CFG: IN	1000	FIXED0%				ARIT3-IN1	
2	CFG: IN	1000	FIXED0%				ARIT3-IN2	
C0605			-199.99		{0.01 %}	199.99	Function block ARIT3 ● Display of the signals linked in C0604	
1	DIS: IN						ARIT3-IN1	
2	DIS: IN						ARIT3-IN2	
C0606	MONIT OC8	2	0 2 3	TRIP Warning Off			**Configuration of the $I^2 \times t$ advance warning** The threshold is set in C0127.	
C0608 STOP	CFG: IN	1000	FIXED0%			📖 Selection list 1	Configuration of analog input signal, function block SQRT1	See System Manual (extension)
C0609	DIS: IN		-199.99		{0.01 %}	199.99	Function block SQRT1 ● Display of the signal linked in C0608	
C0610 STOP						📖 Selection list 1	Configuration of analog input signals, function block ADD1	See System Manual (extension)
1	CFG: IN	1000	FIXED0%				Addition input ADD1-IN1	
2	CFG: IN	1000	FIXED0%				Addition input ADD1-IN2	
3	CFG: IN	1000	FIXED0%				Subtraction input ADD1-IN3	
C0611			-199.99		{0.01 %}	199.99	Function block ADD1 ● Display of the signals linked in C0610	
1	DIS: IN						ADD1-IN1	
2	DIS: IN						ADD1-IN2	
3	DIS: IN						ADD1-IN3	
C0612 STOP						📖 Selection list 1	Configuration of analog input signals, function block ADD2	See System Manual (extension)
1	CFG: IN	1000	FIXED0%				Addition input ADD2-IN1	
2	CFG: IN	1000	FIXED0%				Addition input ADD2-IN2	
3	CFG: IN	1000	FIXED0%				Subtraction input ADD2-IN3	
C0613			-199.99		{0.01 %}	199.99	Function block ADD2 ● Display of the signals linked in C0612	
1	DIS: IN						ADD2-IN1	
2	DIS: IN						ADD2-IN2	
3	DIS: IN						ADD2-IN3	
C0620	DB1 gain	1.00	-10.00		{0.01 }	10.00	Gain, function block DB1	See System Manual (extension)
C0621	DB1 value	1.00	0.00		{0.01 %}	100.00	Dead band, function block DB1 ● Fault signals around the zero point of the input signal are set to 0	
C0622 STOP	CFG: IN	1000	FIXED0%			📖 Selection list 1	Configuration of analog input signal, function block DB1	
C0623	DIS: IN		-199.99		{0.01 %}	199.99	Function block DB1 ● Display of the signal linked in C0622	

Code		Possible settings					IMPORTANT	
No.	Name	Lenze	Selection					
C0630	Max limit	100.00	-199.99	{0.01 %}		199.99	Upper limit, function block LIM1 ● The analog input signal is limited to the set value	See System Manual (extension)
C0631	MiN limit	-100.0	-199.99	{0.01 %}		199.99	Lower limit, function block LIM1 ● The analog input signal is limited to the set value	
C0632 STOP	CFG: IN	1000	FIXED0%			🕮 Selection list 1	Configuration of analog input signal, function block LIM1	
C0633	DIS: IN		-199.99	{0.01 %}		199.99	Function block LIM1 ● Display of the signal linked in C0632	
C0640	Delay T	20.00	0.01	{0.01 s}		50.00	Time constant, function block PT1-1 ● Time period by which the output of analog signal is delayed	See System Manual (extension)
C0641 STOP	CFG: IN	1000	FIXED0%			🕮 Selection list 1	Configuration of analog input signal, function block PT1-1	
C0642	DIS: IN		-199.99	{0.01 %}		199.99	Function block PT1-1 ● Display of the signal linked in C0641	
C0643	Delay T	20.00	0.01	{0.01 s}		50.00	Time constant, function block PT1-2 ● Time period by which the output of analog signal is delayed	
C0644 STOP	CFG: IN	1000	FIXED0%			🕮 Selection list 1	Configuration of analog input signal, function block PT1-2	
C0645	DIS: IN		-199.99	{0.01 %}		199.99	Function block PT1-2 ● Display of the signal linked in C0644	
C0650	DT1-1 gain	1.00	-320.00	{0.01 }		320.00	Gain, function block DT1-1 ● Gain of the analog input signal	See System Manual (extension)
C0651	Delay T	1.000	0.005	{0.01 s}		5.000	Time constant, function block DT1-1 ● Time period by which the output of analog signal is delayed	
C0652 STOP	CFG: IN	1000	FIXED0%			🕮 Selection list 1	Configuration of analog input signal, function block DT1-1	
C0653	Sensibility	1	1	15 bits			Input sensitivity, function block DT1-1 ● According to the setting only the indicated higher-order bits are evaluated	
			2	14 bits				
			3	13 bits				
			4	12 bits				
			5	11 bits				
			6	10 bits				
			7	9 bits				
C0654	DIS: IN		-199.99	{0.01 %}		199.99	Function block DT1-1 ● Display of the signal linked in C0652	

Code		Possible settings					IMPORTANT	
No.	Name	Lenze	Selection					
C0655	Numerator	1	-32767	{1}		32767	Configuration of conversion factor with numerator and denominator, function block CONV5 $OUT\,[rpm] = IN\,[\%] \cdot \frac{15000\ rpm}{100\ \%} \cdot \frac{C0655}{C0656}$	See System Manual (extension)
C0656	Denominator	1	1	{1}		32767		
C0657 STOP	CFG: IN	1000	FIXED0%		📖 Selection list 1		Configuration of analog input signal, function block CONV5	
C0658	DIS: IN		-199.99	{0.01 %}		199.99	Function block CONV5 ● Display of the signal linked in C0657	
C0661 STOP	CFG: IN	1000	FIXED0%		📖 Selection list 1		Configuration of analog input signal, function block ABS1 ● Converts bipolar signals into unipolar signals	See System Manual (extension)
C0662	DIS: IN		-199.99	{0.01 %}		199.99	Function block ABS1 ● Display of the signal linked in C0661	
C0671	RFG1 Tir	0.00	0.00	{0.01 s}		999.90	Acceleration time T_{ir} and deceleration time T_{if}, function block RFG1 ● Acceleration and deceleration ramp	See System Manual (extension)
C0672	RFG1 Tif	0.00	0.00	{0.01 s}		999.90		
C0673 STOP	CFG: IN	1000	FIXED0%		📖 Selection list 1		Configuration of analog input signal, function block RFG1 ● Selection of a final value at RFG1-OUT	
C0674 STOP	CFG: SET	1000	FIXED0%		📖 Selection list 1		Configuration of analog input signal, function block RFG1 ● Selection of a starting value at RFG1-OUT	
C0675 STOP	CFG: LOAD	1000	FIXED0		📖 Selection list 2		Configuration of digital input signal, function block RFG1 ● HIGH: RFG1-OUT is set to the value at RFG1-Set ● LOW: The signal at RFG1-OUT travels along the ramps towards the input value at RFG1-IN	
C0676			-199.99	{0.01 %}		199.99	Function block RFG1 ● Display of the signals linked in C0673 and C0674	
1	DIS: RFG1						RFG1-IN	
2	DIS: RFG1						RFG1-SET	
C0677	DIS: LOAD		0			1	Function block RFG1 ● Display of the signal linked in C0675	

Code		Possible settings				IMPORTANT	
No.	Name	Lenze	Selection				
C0680	Function	1	1	IN1 = IN 2		Function selection, function block CMP1 ● Compare input signals at CMP1-IN1 and CMP1-IN2	See System Manual (extension)
			2	IN1 > IN2			
			3	IN1 < IN2			
			4	|IN1IN2|			
			5	|IN1IN2|			
			6	|IN1IN2|			
C0681	Hysteresis	1.00	0.00	{0.01 %}	100.00	Hysteresis, function block CMP1 ● Hysteresis for input signals which are not stable and hence the output oscillates	
C0682	Window	1.00	0.00	{0.01 %}	100.00	Window, function block CMP1 ● Set the range in which the signal comparison is to be apply	
C0683 STOP					📖 Selection list 1	Configuration of analog input signal, function block CMP1	
1	CFG: IN	5001	MCTRL-NACT			CMP1-IN1	
2	CFG: IN	19500	FCODE-17			CMP1-IN2	
C0684			-199.99	{0.01 %}	199.99	Function block CMP1 ● Display of the signals linked in C0683	
1	DIS: IN					CMP1-IN1	
2	DIS: IN					CMP1-IN2	
C0685	Function	1	1	IN1 = IN 2		Function selection, function block CMP2 ● Compare input signals at CMP2-IN1 and CMP2-IN2	See System Manual (extension)
			2	IN1 > IN2			
			3	IN1 < IN2			
			4	|IN1IN2|			
			5	|IN1IN2|			
			6	|IN1IN2|			
C0686	Hysteresis	1.00	0.00	{0.01 %}	100.00	Hysteresis, function block CMP2 ● Hysteresis for input signals which are not stable and hence the output oscillates	
C0687	Window	1.00	0.00	{0.01 %}	100.00	Window, function block CMP2 ● Set the range in which the signal comparison is to be apply	
C0688 STOP					📖 Selection list 1	Configuration of analog input signal, function block CMP2	
1	CFG: IN	1000	FIXED0%			CMP2-IN1	
2	CFG: IN	1000	FIXED0%			CMP2-IN2	
C0689			-199.99	{0.01 %}	199.99	Function block CMP2 ● Display of the signals linked in C0688	
1	DIS: IN					CMP2-IN1	
2	DIS: IN					CMP2-IN2	

Code		Possible settings				IMPORTANT	
No.	Name	Lenze	Selection				
C0690	Function	1	1	IN1 = IN 2		Function selection, function block CMP3 ● Compare input signals at CMP3-IN1 and CMP3-IN2	See System Manual (extension)
			2	IN1 > IN2			
			3	IN1 < IN2			
			4	|IN1IN2|			
			5	|IN1IN2|			
			6	|IN1| < |IN2|			
C0691	Hysteresis	1.00	0.00	{0.01 %}	100.00	Hysteresis, function block CMP3 ● Hysteresis for input signals which are not stable and hence the output oscillates	
C0692	Window	1.00	0.00	{0.01 %}	100.00	Window, function block CMP3 ● Set the range in which the signal comparison is to be apply	
C0693 STOP					📖 Selection list 1	Configuration of analog input signal, function block CMP3	
1	CFG: IN	1000	FIXED0%			CMP3-IN1	
2	CFG: IN	1000	FIXED0%			CMP3-IN2	
C0694			-199.99	{0.01 %}	199.99	Function block CMP3 ● Display of the signals linked in C0693	
1	DIS: IN					CMP3-IN1	
2	DIS: IN					CMP3-IN2	
C0700 STOP	CFG: IN	19523	FCODE-472/3		📖 Selection list 1	Configuration of analog input signal, function block ANEG1 ● The value at ANEG1-IN is multiplied by -1 and output	See System Manual (extension)
C0701	DIS: IN		-199.99	{0.01 %}	199.99	Function block ANEG1 ● Display of the signal linked in C0700	
C0703 STOP	CFG: IN	19523	FCODE-472/3		📖 Selection list 1	Configuration of analog input signal, function block ANEG2 ● The value at ANEG2-IN is multiplied by -1 and output	See System Manual (extension)
C0704	DIS: IN		-199.99	{0.01 %}	199.99	Function block ANEG2 ● Display of the signal linked in C0703	

Code		Possible settings					IMPORTANT	
No.	Name	Lenze	Selection					
C0705	Function	1	1	IN1 = IN 2			Function selection, function block CMP4 ● Compare input signals at CMP4-IN1 and CMP4-IN2	See System Manual (extension)
			2	IN1 > IN2				
			3	IN1 < IN2				
			4	|IN1| = |IN2|				
			5	|IN1| > |IN2|				
			6	|IN1| < |IN2|				
C0706	Hysteresis	1.00	0.00		{0.01 %}	100.00	Hysteresis, function block CMP4 ● Hysteresis for input signals which are not stable and hence the output oscillates	
C0707	Window	1.00	0.00		{0.01 %}	100.00	Window, function block CMP4 ● Set the range in which the signal comparison is to be apply	
C0708 STOP						🕮 Selection list 1	Configuration of analog input signal, function block CMP4	
1	CFG: IN	1000	FIXED0%				CMP4-IN1	
2	CFG: IN	1000	FIXED0%				CMP4-IN2	
C0709			-199.99		{0.01 %}	199.99	Function block CMP4 ● Display of the signals linked in C0708	
1	DIS: IN						CMP4-IN1	
2	DIS: IN						CMP4-IN2	
C0710	Function	0					Function selection, function block TRANS1	See System Manual (extension)
			0	Rising trans		Rising edge	1. LOW-HIGH edge at TRANS1-IN switches TRANS1-OUT = HIGH 2. After the time has elapsed (C0711), TRANS1-OUT switches to LOW	
			1	Falling trans		Falling edge	1. HIGH-LOW edge at TRANS1-IN switches TRANS1-OUT = HIGH 2. After the time has elapsed (C0711), TRANS1-OUT switches to LOW	
			2	Both trans		Both edges	1. LOW-HIGH- or HIGH-LOW edge at TRANS1-IN switches TRANS1-OUT = HIGH 2. After the time has elapsed (C0711), TRANS1-OUT switches to LOW	
C0711	Pulse T	0.001	0.001		{0.001 s}	60.000	Pulse duration, function block TRANS1 ● After the time has elapsed, TRANS1-OUT switches to LOW	
C0713 STOP	CFG: IN	1000	FIXED0			🕮 Selection list 2	Configuration of digital input signal, function block TRANS1	
C0714	DIS: IN		0			1	Function block TRANS1 ● Display of the signal linked in C0713	

Code		Possible settings					IMPORTANT	
No.	Name	Lenze	Selection					
C0715	Function	0					Function selection, function block TRANS2	See System Manual (extension)
			0	Rising trans	Rising edge		1. LOW-HIGH edge at TRANS2-IN switches TRANS2-OUT = HIGH 2. After the time has elapsed (C0716), TRANS2-OUT switches to LOW	
			1	Falling trans	Falling edge		1. HIGH-LOW edge at TRANS2-IN switches TRANS2-OUT = HIGH 2. After the time has elapsed (C0716), TRANS2-OUT switches to LOW	
			2	Both trans	Both edges		1. LOW-HIGH or HIGH-LOW edge at TRANS2-IN switches TRANS2-OUT = HIGH 2. After the time has elapsed (C0716), TRANS2-OUT switches to LOW	
C0716	Pulse T	0.001	0.001	{0.001 s}		60.000	Pulse duration, function block TRANS2 ● After the time has elapsed, TRANS2-OUT switches to LOW	
C0718 STOP	CFG: IN	1000	FIXED0		🕮 Selection list 2		Configuration of digital input signal, function block TRANS2	
C0719	DIS: IN		0			1	Function block TRANS2 ● Display of the signal linked in C0718	
C0720	Function	2					Function selection, function block DIGDEL1	See System Manual (extension)
			0	On delay	On delay		1. LOW-HIGH edge at DIGDEL1-IN starts a timing element 2. After the time has elapsed (C0721), DIGDEL1-OUT switches to HIGH	
			1	Off delay	Off delay		1. LOW-HIGH edge at DIGDEL1-IN starts a timing element and sets DIGDEL1-OUT = HIGH 2. After the time has elapsed (C0721), DIGDEL1-OUT switches to LOW	
			2	ON/OFF delay	On/off delay		1. LOW-HIGH or HIGH-LOW edge at DIGDEL1-IN starts a timing element 2. After the time has elapsed (C0721), DIGDEL1-OUT = DIGDEL1-IN	
C0721	Delay T	1.000	0.001	{0.001 s}		60.000	Delay time, function block DIGDEL1	
C0723 STOP	CFG: IN	1000	FIXED0		🕮 Selection list 2		Configuration of digital input signal, function block DIGDEL1	
C0724	DIS: IN		0			1	Function block DIGDEL1 ● Display of the signal linked in C0723	

Code		Possible settings				IMPORTANT	
No.	Name	Lenze	Selection				
C0725	Function	2				Function selection, function block DIGDEL2	See System Manual (extension)
			0	On delay	On delay	1. LOW-HIGH edge at DIGDEL2-IN starts a timing element 2. After the time has elapsed (C0726), DIGDEL2-OUT switches to HIGH	
			1	Off delay	Off delay	1. LOW-HIGH edge at DIGDEL2-IN starts a timing element and sets DIGDEL2-OUT = HIGH 2. After the time has elapsed (C0726), DIGDEL2-OUT switches to LOW	
			2	ON/OFF delay	On/off delay	1. LOW-HIGH or HIGH-LOW edge at DIGDEL2-IN starts a timing element 2. After the time has elapsed (C0726), DIGDEL2-OUT = DIGDEL2-IN	
C0726	Delay T	1.000	0.001	{0.001 s}	60.000	Delay time, function block DIGDEL2	
C0728 STOP	CFG: IN	1000	FIXED0		📖 Selection list 2	Configuration of digital input signal, function block DIGDEL2	
C0729	DIS: IN		0		1	Function block DIGDEL2 ● Display of the signal linked in C0728	
C0730	Mode	0	0	Stop measurement		Function block OSZ ● Starting / stopping the measured value recording	See System Manual (extension)
			1	Start measurement			
C0731	Status		0	Measurement completed		Oscilloscope function ● Read only ● Current operating status	
			1	Measurement active			
			2	Trigger detected			
			3	Abort			
			4	Abort after trigger			
			5	Read memory			
C0732 STOP					📖 Selection list 1	Configuration of analog input signals, function block OSZ Function block OSZ	See System Manual (extension)
1	OSZ channel 1	1000	FIXED0%				
2	OSZ channel 2	1000	FIXED0%				
3	OSZ channel 3	1000	FIXED0%				
4	OSZ channel 4	1000	FIXED0%				
C0733 STOP					📖 Selection list 2	Configuration of digital input signal, function block OSZ	
1	Trigger input	1000	FIXED0				
C0734	Trigger source	1	0	OSZ trigger input		Function block OSZ ● Configure digital input C0732 or C0733 with desired trigger signal	See System Manual (extension)
			1	OSZ channel 1			
			2	OSZ channel 2			
			3	OSZ channel 3			
			4	OSZ channel 4			
C0735	Trigger level	0	-32767	{1}	32767	Function block OSZ ● Trigger level OSZ channel 1 ... OSZ channel 4	
C0736	Trigger edge	0	0	LOW-HIGH edge		Oscilloscope function	
			1	HIGH-LOW edge			
C0737	Trigger Delay	0.0	-100.0	{0.1 %}	999.99	Function block OSZ ● Setting of pretriggering and posttriggering	

Code		Possible settings				IMPORTANT	
No.	Name	Lenze	Selection				
C0738	Sampling period	3	3	1 ms		Oscilloscope function ● Time base	See System Manual (extension)
			4	2 ms			
			5	5 ms			
			6	10 ms			
			7	20 ms			
			8	50 ms			
			9	100 ms			
			10	200 ms			
			11	500 ms			
			12	1 s			
			13	2 s			
			14	5 s			
			15	10 s			
			16	20 s			
			17	50 s			
			18	1 min			
			19	2 min			
			20	5 min			
			21	10 min			
C0739	Number of channels	4	1	{1}	4	Function block OSZ ● Switching on/off the channels – 1 = channel 1 – 2 = channel 1 + 2 – 3 = channel 1 ... 3 – 4 = channel 1 ... 4	See System Manual (extension)
C0740		0				Oscilloscope function ● Reading data memory	
1	Read start position	0	0	{1}	65535	● Provides a pointed access to a storage block	
2	Enable/inhibit data reading	0	0	No data reading			
			1	Data reading			
C0741	STATUS		0		1000000000	Function block OSZ ● Read only	See System Manual (extension)
1	Version						
2	Memory size						
3	Data width						
4	Number of channels						
C0742	Data block length	8	0	{1}	65536	Function block OSZ	
C0743	Read data block length (OSZ)		0		65535	Function block OSZ ● Read only ● Reading an 8 byte data block	
C0744	Memory depth	3	0	512 measured values		Oscilloscope function ● Adapt memory capacity to the measurement task	
			1	1024 measured values			
			2	1536 measured values			
			3	2048 measured values			
			4	3072 measured values			
			5	4096 measured values			
			6	8192 measured values			

Code		Possible settings				IMPORTANT	
No.	Name	Lenze	Selection				
C0749			0		65535	Information about storing the measured values, function block OSZ ● Read only	See System Manual (extension)
1	Abort index					Measured value no. of the abort time	
2	Trigger index					Measured value no. of the trigger time	
3	End index					Measured value no. of the end time	
C0750	Vp denom	16	1	1		Gain V_P of the position controller, function block DFRFG1	📖 8.2-13
			2	1/2			
			4	1/4			
			8	1/8			
			16	1/16			
			32	1/32			
			64	1/64			
			128	1/128			
			256	1/256			
			512	1/512			
			1024	1/1024			
			2048	1/2048			
			4096	1/4096			
			8192	1/8192			
			16384	1/16384			
C0751	DFRFG1 Tir	1.000	0.001	{0.001 s}	999.999	Acceleration time T_{ir}, function block DFRFG1	📖 8.2-13
C0752	Max speed	3000	1	{1 rpm}	16000	Maximum speed, function block DFRFG1 ● Maximum speed-up (speed)	
C0753	DFRFG1 QSP	0.000	0.000	{0.001 s}	999.900	Deceleration time T_{if} for quick stop, function block DFRFG1	
C0754	PH error	$2 \cdot 10^9$	10	{1}	$2 \cdot 10^9$	Following error, function block DFRFG1 ● Maximum permissible phase difference between setpoint an actual phase ● 1 rev. = 65535 inc	
C0755	Syn window	100	0	{1 inc.}	65535	Synchronisation window, function block DFRFG1 ● 1 rev. = 65535 inc	

Code		Possible settings				IMPORTANT	
No.	Name	Lenze	Selection				
C0758 STOP	CFG: IN	1000	FIXEDPHI-0		📖 Selection list 4	Configuration of input signal, function block DFRFG1 ● Speed/phase setpoint signal	📖 8.2-13
C0759 STOP	CFG: QSP	1000	FIXED0		📖 Selection list 2	Configuration of digital input signal, function block DFRFG1 ● HIGH = quick stop active	
C0760 STOP	CFG: STOP	1000	FIXED0		📖 Selection list 2	Configuration of input signal, function block DFRFG1 ● HIGH = Status of the profile generator is maintained, setpoint is saved	
C0761 STOP	CFG: RESET	1000	FIXED0		📖 Selection list 2	Configuration of input signal, function block DFRFG1 ● HIGH = resetting the integrators	
C0764			0		1	Function block DFRFG1 ● Display of the signals linked in C0759, C0760 and C0761	
1	DIS: QSP						
2	DIS: STOP						
3	DIS: RESET						
C0765	DIS: IN		-32767	{1 rpm}	32767	Function block DFRFG1 ● Display of the signal linked in C0758	
C0770 STOP	CFG: D	1000	FIXED0		📖 Selection list 2	Configuration of digital input signal, function block FLIP1	See System Manual (extension)
C0771 STOP	CFG: CLK	1000	FIXED0		📖 Selection list 2	Configuration of digital input signal, function block FLIP1 ● Each LOW-HIGH edge at FLIP1-CLK switches the signal at FLIP1-D to FLIP1-OUT	
C0772 STOP	CFG: CLR	1000	FIXED0		📖 Selection list 2	Configuration of digital input signal, function block FLIP1 ● Resets the flip-flop ● HIGH: Sets FLIP1-OUT = LOW ● Input has highest priority	
C0773			0		1	Function block FLIP1 ● Display of the signals linked in C0770, C0771 and C0773	
1	DIS: D						
2	DIS: CLK						
3	DIS: CLR						
C0775 STOP	CFG: D	1000	FIXED0		📖 Selection list 2	Configuration of digital input signal, function block FLIP2	See System Manual (extension)
C0776 STOP	CFG: CLK	1000	FIXED0		📖 Selection list 2	Configuration of digital input signal, function block FLIP2 ● Each LOW-HIGH edge at FLIP2-CLK switches the signal at FLIP2-D to FLIP2-OUT	
C0777 STOP	CFG: CLR	1000	FIXED0		📖 Selection list 2	Configuration of digital input signal, function block FLIP2 ● Resets the flip-flop ● HIGH: sets FLIP2-OUT = LOW ● Input has highest priority	
C0778			0		1	Function block FLIP2 ● Display of the signals linked in C0775, C0776 and C0777	
1	DIS: D						
2	DIS: CLK						
3	DIS: CLR						

Code		Possible settings			IMPORTANT	
No.	Name	Lenze	Selection			
C0780 STOP	CFG: N	5250	NLIM1-OUT	📖 Selection list 1	Configuration of analog input signal, function block NSET ● Main setpoint	See System Manual (extension)
C0781 STOP	CFG: N-INV	10251	R/L/Q-R/L	📖 Selection list 2	Configuration of digital input signal, function block NSET ● HIGH: main setpoint (C0780) is inverted	
C0782 STOP	CFG: NADD	55	AIN2-OUT	📖 Selection list 1	Configuration of analog input signal, function block NSET ● Additional setpoint	
C0783 STOP	CFG: NADD-INV	1000	FIXED0	📖 Selection list 2	Configuration of digital input signal, function block NSET ● HIGH: additional setpoint (C0783) is inverted	
C0784 STOP	CFG: CINH-VAL	5001	MCTRL-NACT	📖 Selection list 1	Configuration of analog input signal, function block NSET ● The signal is accepted by the main setpoint integrator when the controller is inhibited	
C0785 STOP	CFG: SET	5000	MCTRL-nset2	📖 Selection list 1	Configuration of analog input signal, function block NSET ● When NSET-LOAD = HIGH, the signal is accepted by the main setpoint integrator	
C0786 STOP	CFG: LOAD	5001	MCTRL-QSP-OUT	📖 Selection list 2	Configuration of digital input signal, function block NSET ● HIGH: The signal at NSET-SET is accepted by the mains setpoint integrator ● Control of both ramp function generators in special situations, e.g. quick stop	
C0787 STOP				📖 Selection list 2	Configuration of digital input signals, function block NSET ● Activation of a fixed speed via binary coding of the digital input signals ● For coding see description of function block NSET ● Parameter setting of the fixed speeds (JOG setpoints) in C0039	See System Manual (extension)
1	CFG: JOG	53	DIGIN3		NSET-JOG*1	
2	CFG: JOG	1000	FIXED0		NSET-JOG*2	
3	CFG: JOG	1000	FIXED0		NSET-JOG*4	
4	CFG: JOG	1000	FIXED0		NSET-JOG*8	
C0788 STOP				📖 Selection list 2	Configuration of digital input signals, function block NSET ● Activation of additional acceleration and deceleration times for the mains setpoint via binary coding of the digital input signals ● For coding see description of function block NSET ● Parameter setting of the times in C0101 and 103	
1	CFG: TI	1000	FIXED0		NSET-Ti*1	
2	CFG: TI	1000	FIXED0		NSET-Ti*2	
3	CFG: TI	1000	FIXED0		NSET-Ti*4	
4	CFG: TI	1000	FIXED0		NSET-Ti*8	

Code		Possible settings			IMPORTANT	
No.	Name	Lenze	Selection			
C0789 STOP	CFG: RFG-0	1000	FIXED0	📖 Selection list 2	Configuration of digital input signal, function block NSET ● HIGH: Guides the main setpoint integrator to 0 via the current T_i times	See System Manual (extension)
C0790 STOP	CFG: RFG-STOP	1000	FIXED0	📖 Selection list 2	Configuration of digital input signal, function block NSET ● HIGH: Keeps the main setpoint integrator on its current value	
C0798			-199.99 {0.01 %} 199.99		Function block NSET ● Display of the signals linked in C0783 and C0785 Read only: analog input signals of NSET	See System Manual (extension)
1	DIS: CINH-VAL					
2	DIS: SET					
C0799	Input signals		0 1		Function block NSET ● Display of the signals linked in C0781, C0783, C0786, C0787, C0788, C0789 and C0790	
1	DIS: N-INV					
2	DIS: NADD-INV					
3	DIS: LOAD					
4	DIS: JOG*1					
5	DIS: JOG*2					
6	DIS: JOG*4					
7	DIS: JOG*8					
8	DIS: TI*1					
9	DIS: TI*2					
10	DIS: TI*4					
11	DIS: TI*8					
12	DIS: RFG-0					
13	DIS: RFG-STOP					
C0800 STOP	CFG: SET	1000	FIXED0%	📖 Selection list 1	Configuration of analog input signal, function block PCTRL ● Input for the process setpoint ● Value range: ±200 %	See System Manual (extension)
C0801 STOP	CFG: ACT	1000	FIXED0%	📖 Selection list 1	Configuration of analog input signal, function block PCTRL Configuration of analog input signal of PCTRL1 ● Input for the actual value ● Value range: ±200 %	
C0802 STOP	CFG: INFLU	1000	FIXED0%	📖 Selection list 1	Configuration of analog input signal, function block PCTRL ● Evaluation (influence) of the output signal ● Value range: ±200 %	
C0803 STOP	CFG: ADAPT	1000	FIXED0%	📖 Selection list 1	Configuration of analog input signal, function block PCTRL ● The gain V_p can be changed via the adaptation input ● Value range: ±200 %	
C0804 STOP	CFG: INACT	1000	FIXED0	📖 Selection list 2	Configuration of digital input signal, function block PCTRL ● HIGH = deactivates the process controller	
C0805 STOP	CFG: I-OFF	1000	FIXED0	📖 Selection list 2	Configuration of digital input signal, function block PCTRL ● HIGH = Switching off integral action component ● LOW = Switching on integral action component	

Code		Possible settings			IMPORTANT	
No.	Name	Lenze	Selection			
C0808			-199.99 {0.01 %} 199.99		Function block PCTRL ● Display of the signals linked in C0801, C0802, C0803 and C0804	See System Manual (extension)
1	DIS: SET					
2	DIS: ACT					
3	DIS: INFLU					
4	DIS: ADAPT					
C0809					Function block PCTRL ● Display of the signals linked in C0805 and C0806	
1	DIS: INACT					
2	DIS: I-OFF					
C0810 STOP				🕮 Selection list 1	Configuration of analog input signals, function block ASW1	See System Manual (extension)
1	CFG: IN	1000	FIXED0%		ASW1-IN1	
2	CFG: IN	1000	FIXED0%		ASW2-IN2	
C0811 STOP	CFG: SET	1000	FIXED0	🕮 Selection list 2	Configuration of digital input signal, function block ASW1 ● LOW: signal at ASW1-IN1 is output to ASW1-OUT ● HIGH: signal at ASW1-IN2 is output to ASW1-OUT	
C0812			-199.99 {0.01 %} 199.99		Function block ASW1 ● Display of the signals linked in C0810	
1	DIS: IN				ASW1-IN1	
2	DIS: IN				ASW1-IN2	
C0813	DIS: SET		0 1		Function block ASW1 ● Display of the signal linked in C0811	
C0815 STOP				🕮 Selection list 1	Configuration of analog input signals, function block ASW2	See System Manual (extension)
1	CFG: IN	1000	FIXED0%		ASW2-IN1	
2	CFG: IN	1000	FIXED0%		ASW2-IN2	
C0816 STOP	CFG: SET	1000	FIXED0	🕮 Selection list 2	Configuration of digital input signal, function block ASW2 ● LOW: signal at ASW2-IN1 is output to ASW2-OUT ● HIGH: signal at ASW2-IN2 is output to ASW2-OUT	
C0817			-199.99 {0.01 %} 199.99		Function block ASW2 ● Display of the signals linked in C0815	
1	DIS: IN				ASW2-IN1	
2	DIS: IN				ASW2-IN2	
C0818	DIS: SET		0 1		Function block ASW2 ● Display of the signal linked in C0816	
C0820 STOP				🕮 Selection list 2	Configuration of digital input signals, function block AND1	See System Manual (extension)
1	CFG: IN	1000	FIXED0		AND1-IN1	
2	CFG: IN	1000	FIXED0		AND1-IN2	
3	CFG: IN	1000	FIXED0		AND1-IN3	
C0821			0 1		Function block AND1 ● Display of the signals linked in C0820	See System Manual (extension)
1	DIS: IN				AND1-IN1	
2	DIS: IN				AND1-IN2	
3	DIS: IN				AND1-IN3	

Code		Possible settings		IMPORTANT	
No.	Name	Lenze	Selection		
C0822 STOP			📖 Selection list 2	Configuration of digital input signals, function block AND2	See System Manual (extension)
1	CFG: IN	1000	FIXED0	AND2-IN1	
2	CFG: IN	1000	FIXED0	AND2-IN2	
3	CFG: IN	1000	FIXED0	AND2-IN3	
C0823			0 1	Function block AND2 ● Display of the signals linked in C0822	See System Manual (extension)
1	DIS: IN			AND2-IN1	
2	DIS: IN			AND2-IN2	
3	DIS: IN			AND2-IN3	
C0824 STOP			📖 Selection list 2	Configuration of digital input signals, function block AND3	See System Manual (extension)
1	CFG: IN	1000	FIXED0	AND3-IN1	
2	CFG: IN	1000	FIXED0	AND3-IN2	
3	CFG: IN	1000	FIXED0	AND3-IN3	
C0825			0 1	Function block AND3 ● Display of the signals linked in C0824	See System Manual (extension)
1	DIS: IN			AND3-IN1	
2	DIS: IN			AND3-IN2	
3	DIS: IN			AND3-IN3	
C0826 STOP			📖 Selection list 2	Configuration of digital input signals, function block AND4	See System Manual (extension)
1	CFG: IN	1000	FIXED0	AND4-IN1	
2	CFG: IN	1000	FIXED0	AND4-IN2	
3	CFG: IN	1000	FIXED0	AND4-IN3	
C0827			0 1	Function block AND4 ● Display of the signals linked in C0826	See System Manual (extension)
1	DIS: IN			AND4-IN1	
2	DIS: IN			AND4-IN2	
3	DIS: IN			AND4-IN3	
C0828 STOP			📖 Selection list 2	Configuration of digital input signals, function block AND5	See System Manual (extension)
1	CFG: IN	1000	FIXED0	AND5-IN1	
2	CFG: IN	1000	FIXED0	AND5-IN2	
3	CFG: IN	1000	FIXED0	AND5-IN3	
C0829			0 1	Function block AND5 ● Display of the signals linked in C0828	See System Manual (extension)
1	DIS: IN			AND5-IN1	
2	DIS: IN			AND5-IN2	
3	DIS: IN			AND5-IN3	

Code		Possible settings		IMPORTANT	
No.	Name	Lenze	Selection		
C0830 STOP			📖 Selection list 2	Configuration of digital input signals, function block OR1	See System Manual (extension)
1	CFG: IN	1000	FIXED0	OR1-IN1	
2	CFG: IN	1000	FIXED0	OR1-IN2	
3	CFG: IN	1000	FIXED0	OR1-IN3	
C0831			0 1	Function block OR1 ● Display of the signals linked in C0830	
1	DIS: IN			OR1-IN1	
2	DIS: IN			OR1-IN2	
3	DIS: IN			OR1-IN3	
C0832 STOP			📖 Selection list 2	Configuration of digital input signals, function block OR2	See System Manual (extension)
1	CFG: IN	1000	FIXED0	OR2-IN1	
2	CFG: IN	1000	FIXED0	OR2-IN2	
3	CFG: IN	1000	FIXED0	OR2-IN3	
C0833			0 1	Function block OR2 ● Display of the signals linked in C0832	
1	DIS: IN			OR2-IN1	
2	DIS: IN			OR2-IN2	
3	DIS: IN			OR2-IN3	
C0834 STOP			📖 Selection list 2	Configuration of digital input signals, function block OR3	See System Manual (extension)
1	CFG: IN	1000	FIXED0	OR3-IN1	
2	CFG: IN	1000	FIXED0	OR3-IN2	
3	CFG: IN	1000	FIXED0	OR3-IN3	
C0835			0 1	Function block OR3 ● Display of the signals linked in C0834	
1	DIS: IN			OR3-IN1	
2	DIS: IN			OR3-IN2	
3	DIS: IN			OR3-IN3	
C0836 STOP			📖 Selection list 2	Configuration of digital input signals, function block OR4	See System Manual (extension)
1	CFG: IN	1000	FIXED0	OR4-IN1	
2	CFG: IN	1000	FIXED0	OR4-IN2	
3	CFG: IN	1000	FIXED0	OR4-IN3	
C0837			0 1	Function block OR4 ● Display of the signals linked in C0836	
1	DIS: IN			OR4-IN1	
2	DIS: IN			OR4-IN2	
3	DIS: IN			OR4-IN3	

Code		Possible settings		IMPORTANT	
No.	Name	Lenze	Selection		
C0838 STOP			📖 Selection list 2	Configuration of digital input signals, function block OR5	See System Manual (extension)
1	CFG: IN	1000	FIXED0	OR5-IN1	
2	CFG: IN	1000	FIXED0	OR5-IN2	
3	CFG: IN	1000	FIXED0	OR5-IN3	
C0839			0 1	Function block OR5 ● Display of the signals linked in C0838	
1	DIS: IN			OR5-IN1	
2	DIS: IN			OR5-IN2	
3	DIS: IN			OR5-IN3	
C0840 STOP	CFG: IN	1000	FIXED0 📖 Selection list 2	Configuration of digital input signal, function block NOT1	See System Manual (extension)
C0841	DIS: IN		0 1	Function block NOT1 ● Display of the signal linked in C0841	
C0842 STOP	CFG: IN	1000	FIXED0 📖 Selection list 2	Configuration of digital input signal, function block NOT2	See System Manual (extension)
C0843	DIS: IN		0 1	Function block NOT2 ● Display of the signal linked in C0842	
C0844 STOP	CFG: IN	1000	FIXED0 📖 Selection list 2	Configuration of digital input signal, function block NOT3	See System Manual (extension)
C0845	DIS: IN		0 1	Function block NOT3 ● Display of the signal linked in C0844	
C0846 STOP	CFG: IN	1000	FIXED0 📖 Selection list 2	Configuration of digital input signal, function block NOT4	See System Manual (extension)
C0847	DIS: IN		0 1	Function block NOT4 ● Display of the signal linked in C0846	
C0848 STOP	CFG: IN	1000	FIXED0 📖 Selection list 2	Configuration of digital input signal, function block NOT5	See System Manual (extension)
C0849	DIS: IN		0 1	Function block NOT5 ● Display of the signal linked in C0848	
C0850 STOP			📖 Selection list 1	Configuration of analog input signals, function block AIF-OUT	See System Manual (extension)
1	CFG: OUT.W1	1000	FIXED0%	Process output word 1 ● 100% = 16384 ● Signal is output via byte 3 and byte 4 to X1	
2	CFG: OUT.W2	1000	FIXED0%	Process output word 2 ● 100% = 16384	
3	CFG: OUT.W3	1000	FIXED0%	Process output word 3 ● 100% = 16384	
C0851 STOP	CFG: OUT.D1	1000	FIXED0INC 📖 Selection list 3	Configuration of phase input signal, function block AIF ● 32-bit phase signal	

Code		Possible settings				IMPORTANT	
No.	Name	Lenze	Selection				
C0852	Type OUT.W2	0				Output of the signal type, function block AIF	See System Manual (extension)
			0	analog	Analog signal	AIF-OUT.W2 (C0850/2) is output to X1	
			1	digital 0-15	Digital signal via bit 0 ... bit 15	FDO-00 ... FDO-15 (LOW word, C0116/1 ... C0116/15) are output to X1	
			2	low phase	Low phase	AIF-OUT.D1 (LOW word, C0851) is output to X1	
C0853	Type OUT.W3	0				Output of the signal type, function block AIF	
			0	analog	Analog signal	AIF-OUT.W3 (C0850/3) is output to X1	
			1	digital 16-31	Digital signal via bit 16 ... bit 31	FDO-16 ... FDO-31 (HIGH word, C0116/16 ... C0116/31) are output to X1	
			2	high phase	High phase	AIF-OUT.D1 (HIGH word, C0851) is output to X1	
C0855			0		FFFF	Process input words, function block AIF-IN ● Read only	See System Manual (extension)
1	DIS: IN (0 ... 15)					Bit 0 ... bit 15 (via byte 5 and byte 6)	
2	DIS: IN (16 ... 31)					Bit 16 ... bit 31 (via byte 7 and byte 8)	
C0856			-199.99	{0.01 %}	199.99	Process input words, function block AIF-IN ● Read only ● 100% = 16384	See System Manual (extension)
1	DIS: IN.W1					Input via byte 3 and byte 4	
2	DIS: IN.W2					Input via byte 5 and byte 6	
3	DIS: IN.W3					Input via byte 7 and byte 8	
C0857	DIS: IN.D1		-2147483648	{1}	2147483647	32-bit phase signal, function block AIF-IN ● Read only ● 65536 = 1 rev.	See System Manual (extension)
C0858			-199.99	{0.01 %}	199.99	Process output words, function block AIF-OUT ● Display of the signals linked in C0850 ● 100% = 16384	See System Manual (extension)
1	DIS: OUT.W1						
2	DIS: OUT.W2						
3	DIS: OUT.W3						
C0859	DIS: OUT.D1		-2147483648	{1}	2147483647	32-bit phase signal, function block AIF-OUT ● Display of the signal linked in C0851 ● 1 rev. = 65536	See System Manual (extension)

Code		Possible settings				IMPORTANT	
No.	Name	Lenze	Selection				
C0860 STOP					📖 Selection list 1	Configuration of analog input signals, function block CAN-OUT	See System Manual (extension)
1	CFG: OUT1.W1	1000	FIXED0%			CAN-OUT1	
2	CFG: OUT1.W2	1000	FIXED0%				
3	CFG: OUT1.W3	1000	FIXED0%				
4	CFG: OUT2.W1	1000	FIXED0%				
5	CFG: OUT2.W2	1000	FIXED0%			CAN-OUT2	
6	CFG: OUT2.W3	1000	FIXED0%				
7	CFG: OUT2.W4	1000	FIXED0%				
8	CFG: OUT3.W1	1000	FIXED0%			CAN-OUT3	
9	CFG: OUT3.W2	1000	FIXED0%				
10	CFG: OUT3.W3	1000	FIXED0%				
11	CFG: OUT3.W4	1000	FIXED0%				
C0861 STOP					📖 Selection list 3	Configuration of input signals, function block CAN-OUT	
1	CFG: OUT1.D1	1000	FIXED0INC			CAN-OUT1	
2	CFG: OUT2.D1	1000	FIXED0INC			CAN-OUT2	
3	CFG: OUT3.D1	1000	FIXED0INC			CAN-OUT3	
C0863			0		FFFF	Process input words, function block CAN-IN ● Read only ● Bit 0 ... bit 15 (via byte 5 and byte 6) ● Bit 16 ... bit 31 (via byte 7 and byte 8)	See System Manual (extension)
1	DIS: IN1 dig0					CAN-IN1, bit 0 ... bit 15	
2	DIS: IN1 dig16					CAN-IN1, bit 16 ... bit 31	
3	DIS: IN2 dig0					CAN-IN2, bit 0 ... bit 15	
4	DIS: IN2 dig16					CAN-IN2, bit 16 ... bit 31	
5	DIS: IN3 dig0					CAN-IN3, bit 0 ... bit 15	
6	DIS: IN3 dig16					CAN-IN3, bit 16 ... bit 31	
C0864						Output of the signal type, function block CAN-OUT	See System Manual (extension)
1	TYPEOUT1.W2	0	0	analog	Analog signal	CAN-OUTx.Wx (C0860) is output to X4	
2	TYPEOUT2.W1	0	1	digital 0-15	Digital signal bit 0 ... bit 15	FDO-00 ... FDO-15 (LOW word, C0116/1 ... C0116/15) are output to X4	
3	TypeOUT3.W1	0	2	low phase	Low phase	CAN-OUTx.D1 (LOW word, C0861) is output to X4	
C0865						Output of the signal type, function block CAN-OUT	
1	TYPEOUT1.W3	0	0	analog	Analog signal	CAN-OUTx.Wx (C0860) is output to X4	
2	TYPEOUT2.W2	0	1	digital 16-31	Digital signal bit 16 ... bit 31	FDO-16 ... FDO-31 (HIGH word, C0116/16 ... C0116/31) are output to X1	
3	TYPEOUT3.W2	0	2	high phase	High phase	CAN-OUTx.D1 (HIGH word, C0861) is output to X4	

Code		Possible settings				IMPORTANT	
No.	Name	Lenze	Selection				
C0866			-32768.00	{0.01 %}	32767.00	Process input words, function block CAN-IN ● Read only ● 100% = 16384	See System Manual (extension)
1	DIS: IN1.W1					CAN-IN1	
2	DIS: IN1.W2						
3	DIS: IN1.W3						
4	DIS: IN2.W1					CAN-IN2	
5	DIS: IN2.W2						
6	DIS: IN2.W3						
7	DIS: IN2.W4						
8	DIS: IN3.W1					CAN-IN3	
9	DIS: IN3.W2						
10	DIS: IN3.W3						
11	DIS: IN3.W4						
C0867			-2147483648	{1}	2147483647	32-bit phase signal, function block CAN-IN ● Read only ● 1 rev. = 65536	
1	DIS: IN1.D1						
2	DIS: IN2.D1						
3	DIS: IN3.D1						
C0868			-199.99	{0.01 %}	199.99	Process output words, function block CAN-OUT ● Display of the signals linked in C0860 ● 100% = 16384	See System Manual (extension)
1	DIS: OUT1.W1						
2	DIS: OUT1.W2						
3	DIS: OUT1.W3						
4	DIS: OUT2.W1						
5	DIS: OUT2.W2						
6	DIS: OUT2.W3						
7	DIS: OUT2.W4						
8	DIS: OUT3.W1						
9	DIS: OUT3.W2						
10	DIS: OUT3.W3						
11	DIS: OUT3.W4						
C0869			-2147483648	{1}	2147483647	32-bit phase information, function block CAN-OUT ● Display of the signals linked in C0861 ● 1 rev. = 65536	
1	DIS: OUT1.D1						
2	DIS: OUT2.D1						
3	DIS: OUT3.D1						
C0870 STOP					📖 Selection list 2	Configuration of digital input signals, function block DCTRL	See System Manual (extension)
1	CFG: CINH	1000	FIXED0			DCTRL-CINH1 HIGH = Controller inhibit	
2	CFG: CINH	1000	FIXED0			DCTRL-CINH2 HIGH = Controller inhibit	
C0871 STOP	CFG: TRIP-SET	54	DIGIN4		📖 Selection list 2	Configuration of digital input signal, function block DCTRL ● HIGH = fault message EEr	
C0876 STOP	CFG: TRIP-RES	55	DIGIN5		📖 Selection list 2	Configuration of digital input signal, function block DCTRL ● LOW-HIGH edge = TRIP reset	
C0878						Function block DCTRL ● Display of the signals linked in C0870, C0871 and C0876	See System Manual (extension)
1	DIS: CINH1						
2	DIS: CINH2						
3	DIS: TRIP-SET						
4	DIS: TRIP-RES						

Code		Possible settings					IMPORTANT	
No.	Name	Lenze	Selection					
C0879							Resetting control words ● C0879 = 1 performs one reset	
1	Reset C135	0	0	Ready				
2	Reset AIF	0	1	Reset				
3	Reset CAN	0						
C0880 STOP						📖 Selection list 2	Configuration of digital input signals, function block DCTRL ● Select parameter set ● Selection of a parameter set via binary coding of the digital input signals	See System Manual (extension)
1	CFG: PAR*1	1000	FIXED0	C0880/1	C0880/2	Selected parameter set		
2	CFG: PAR*2	1000	FIXED0	0	0	Parameter set 1		
				0	1	Parameter set 2		
				1	0	Parameter set 3		
				1	1	Parameter set 4		
C0881 STOP	CFG: PAR-LOAD	1000	FIXED0			📖 Selection list 2	Configuration of digital input signal, function block DCTRL ● LOW-HIGH edge = Load selected parameter set into C0880	See System Manual (extension)
C0884							Function block DCTRL ● Display of the signals linked in C0880 and C0881	See System Manual (extension)
1	DIS: PAR*1							
2	DIS: PAR*2							
3	DIS: PAR-LOAD							
C0885 STOP	CFG: R	51	DIGIN1			📖 Selection list 2	Configuration of digital input signals, function block R/L/Q ● Truth table: Inputs Outputs R L R/L QSP 0 0 0/1 1 1 0 0 0 0 1 1 0 1 1 – – – State is unchanged	See System Manual (extension)
C0886 STOP	CFG: L	52	DIGIN2			📖 Selection list 2		
C0889			0			1	Function block R/L/Q ● Display of the signals linked in C0885 and C0886	
1	DIS: R							
2	DIS: L							
C0890 STOP	CFG: N-SET	5050	NSET-NOUT			📖 Selection list 1	Configuration of analog input signal, function block MCTRL ● Speed setpoint	📖 8.2-25 📖 8.2-48
C0891 STOP	CFG: M-Add	1000	FIXED0%			📖 Selection list 1	Configuration of analog input signal, function block MCTRL ● Additional torque setpoint or torque setpoint	📖 8.2-48
C0892 STOP	CFG: Lo-M-LIM	5700	ANEG1-OUT			📖 Selection list 1	Configuration of analog input signal, function block MCTRL ● Lower torque limit in [%] of C0057	
C0893 STOP	CFG: HI-M-LIM	19523	FCODE-472/3			📖 Selection list 1	Configuration of analog input signal, function block MCTRL ● Upper torque limit in [%] of C0057	
C0898 STOP	CFG: M-LIM switch	0	0	M-LIM ON		Reduced torque limit is active	Torque limitation in the field weakening range, function block MCTRL ● If the torque limit is reduced, the maximum possible torque in the field weakening range is lowered with 1/f. This provides a higher motor stability in the field weakening range	📖 8.2-48
			1	M-LIM OFF		Reduced torque limit is inactive		

Code		Possible settings			IMPORTANT	
No.	Name	Lenze	Selection			
C0899 STOP	CFG: N/M-SWT	1000	FIXED0	📖 Selection list 2	Configuration of digital input signal, function block MCTRL ● LOW = active speed control ● HIGH = active torque control	📖 8.2-48
C0900 STOP	CFG: QSP	10250	R/L/Q-QSP	📖 Selection list 2	Configuration of digital input signal, function block MCTRL ● HIGH = drive performs quick stop	📖 8.2-25 📖 8.2-48
C0901 STOP	CFG: I-SET	1000	FIXED0%	📖 Selection list 1	Configuration of analog input signal, function block MCTRL ● Setting of integral action component of the speed controller	📖 8.2-48
C0902 STOP	CFG: I-LOAD	1000	FIXED0	📖 Selection list 2	Configuration of digital input signal, function block MCTRL ● HIGH = the integral action component at MCTRL-I-SET is accepted by the speed controller	
C0903 STOP	CFG: BOOST	5015	MCTRL-BOOST	📖 Selection list 1	Configuration of analog input signal, function block MCTRL ● Boost of the motor voltage	📖 8.2-25
C0904 STOP	CFG: DC-BREAK	1000	FIXED0	📖 Selection list 2	Configuration of digital input signal, function block MCTRL ● HIGH = Motor is braked	📖 8.2-25 📖 8.2-48
C0905	DIS: DC-BREAK		0	1	Function block MCTRL ● Display of the signal linked in C0904	
C0906			-199.99 {0.01 %}	199.99	Function block MCTRL ● Display of the signals linked in C0890, C0891, C0892, C0893, C0901 and C0903	📖 8.2-25 📖 8.2-48
1	DIS: N-SET					
2	DIS: M-ADD					
3	DIS: LO-M-LIM					
4	DIS: HI-M-LIM					
5	DIS: I-SET					
6	DIS: BOOST					
C0907			0	1	Function block MCTRL ● Display of the signals linked in C0899, C0900 and C0902	
1	reserved					
2	DIS: N/M-SWT					
3	DIS: QSP					
4	DIS: I-LOAD					
C0909	speed limit	1	1 +/- 175 %		Speed limitation, function block MCTRL ● Limitation of direction of rotation for the speed setpoint	📖 8.2-25 📖 8.2-48
			2 0 ... 175 %			
			3 -175 ... 0 %			
C0910 STOP	CFG: VP-ADAPT	1006	FIXED100%	📖 Selection list 1	Configuration of analog input signal, function block MCTRL ● Gain adaptation of the speed controller ● If the gain is varying, join to CURVE-OUT of FB CURVE	📖 8.2-25 📖 8.2-48
C0911	DIS: VP-ADAPT		-199.99 {0.01 %}	199.99	Function block MCTRL ● Display of the signal linked in C0910	

Code		Possible settings				IMPORTANT	
No.	Name	Lenze	Selection				
C0912	OV delay time	→	-	{1 ms}	-	Delay time of the pulse enable after an OU message → Depending on C0082, C0086, C0087, C0088, C0089, C0090, C0091, C0092 A change of one of the codes resets C0912 to the time of the selected motor ● The time is derived from the double rotor time constant	📖 8.2-25 📖 8.2-48 📖 9.4-3
C0913 STOP	OV handling	0				Value of the motor current during the flying restart process or after an OU message ● When C0913 = 1, the motor is driven with reduced current to the setpoint speed during the flying restart process of after an OU message. ● The setting is only effective for the drives EVF9326 ... EVF9333	📖 8.2-25 📖 8.2-48
			0	inactive	Non-reduced motor current		
			1	active	Reduced motor current		
C0940	Numerator	1	-32767	{1}	32767	Configuration of conversion factor with numerator and denominator, function block CONV1 $OUT\,[\%] = IN\,[\%] \cdot \frac{C0940}{C0941}$	See System Manual (extension)
C0941	Denominator	1	1	{1}	32767		
C0942 STOP	CFG: IN	1000	FIXED0%		📖 Selection list 1	Configuration of analog input signal, function block CONV1	
C0943	DIS: IN		-199.99	{0.01 %}	199.99	Function block CONV1 ● Display of the signal linked in C0942	
C0945	Numerator	1	-32767	{1}	32767	Configuration of conversion factor with numerator and denominator, function block CONV2 $OUT\,[\%] = IN\,[\%] \cdot \frac{C0945}{C0946}$	See System Manual (extension)
C0946	Denominator	1	1	{1}	32767		
C0947 STOP	CFG: IN	1000	FIXED0%		📖 Selection list 1	Configuration of analog input signal, function block CONV2	
C0948	DIS: IN		-199.99	{0.01 %}	199.99	Function block CONV2 ● Display of the signal linked in C0947	
C0950	Numerator	1	-32767	{1}	32767	Configuration of conversion factor with numerator and denominator, function block CONV3 $OUT\,[\%] = IN\,[rpm] \cdot \frac{100\,\%}{15000\,rpm} \cdot \frac{C0950}{C0951}$	See System Manual (extension)
C0951	Denominator	1	1	{1}	32767		
C0952 STOP	CFG: IN	1000	FIXED0%		📖 Selection list 1	Configuration of analog input signal, function block CONV3	
C0953	DIS: IN		-199.99	{0.01 %}	199.99	Function block CONV3 ● Display of the signal linked in C0952	
C0955	Numerator	1	-32767	{1}	32767	Configuration of conversion factor with numerator and denominator, function block CONV4 $OUT\,[\%] = IN\,[rpm] \cdot \frac{100\,\%}{15000\,rpm} \cdot \frac{C0955}{C0956}$	See System Manual (extension)
C0956	Denominator	1	1	{1}	32767		
C0957 STOP	CFG: IN	1000	FIXED0%		📖 Selection list 1	Configuration of analog input signal, function block CONV4	
C0958	DIS: IN		-199.99	{0.01 %}	199.99	Function block CONV4 ● Display of the signal linked in C0957	

Code		Possible settings					IMPORTANT	
No.	Name	Lenze	Selection					
C0960	Function	1					Function selection, function block CURVE1	See System Manual (extension)
			1	Function 1			Characteristic with two base points	
			2	Function 2			Characteristic with three base points	
			3	Function 3			Characteristic with four base points	
C0961	y0	0.00	0.00	{0.01 %}		199.99	Configuration of base point y0, function block CURVE1 ● Ordinate of the value pair (x = 0 % / y0)	See System Manual (extension)
C0962	y1	50.00	0.00	{0.01 %}		199.99	Configuration of base point y1, function block CURVE1 ● Ordinate of the value pair (x1 / y1)	
C0963	y2	75.00	0.00	{0.01 %}		199.99	Configuration of base point y2, function block CURVE1 ● Ordinate of the value pair (x2 / y2)	
C0964	y100	100.0	0.00	{0.01 %}		199.99	Configuration of base point y100, function block CURVE1 ● Ordinate of the value pair (x 100 % / y100)	
C0965	x1	50.00	0.01	{0.01 %}		99.99	Configuration of base point x1, function block CURVE1 ● Abscissa of the pair (x1 / y1)	
C0966	x2	75.00	0.01	{0.01 %}		99.99	Configuration of base point x2, function block CURVE1 ● Abscissa of the pair (x2 / y2)	
C0967 STOP	CFG: IN	1000	FIXED0%			🕮 Selection list 1	Configuration of analog input signal, function block CURVE1	See System Manual (extension)
C0968	DIS: IN		-199.99	{0.01 %}		199.99	Function block CURVE1 ● Display of the signal linked in C0967	

Code		Possible settings				IMPORTANT	
No.	Name	Lenze	Selection				
C0970 STOP	CFG: SET	1000	FIXED0%		📖 Selection list 1	Configuration of analog input signal, function block MFAIL ● Starting value for the controlled deceleration in [%] of C0011	See System Manual (extension)
C0971 STOP	CFG: FAULT	1000	FIXED0		📖 Selection list 2	Configuration of digital input signal, function block MFAIL ● HIGH = activates mains failure control	
C0972 STOP	CFG: RESET	1000	FIXED0		📖 Selection list 2	Configuration of digital input signal, function block MFAIL ● HIGH = resets mains failure control	
C0973 STOP	CFG: ADAPT	1000	FIXED0%		📖 Selection list 1	Configuration of analog input signal, function block MFAIL ● Dynamic adaptation of the proportional gain of U_{Gsetl} controller in [%] of C0980	
C0974 STOP	CFG: CONST	1000	FIXED0%		📖 Selection list 1	Configuration of analog input signal, function block MFAIL ● Proportional gain of U_{Gset} controller in [%] of C0980	
C0975 STOP	CFG: THRESHLD	1000	FIXED0%		📖 Selection list 1	Configuration of analog input signal, function block MFAIL ● Restart protection when the value falls below the speed threshold ● Restart threshold in [%] of C0011	
C0976 STOP	CFG: NACT	1000	FIXED0%		📖 Selection list 1	Configuration of analog input signal, function block MFAIL ● Comparison value for the restart threshold in [%] of C0011 ● Start for V_2 controller	
C0977 STOP	CFG: SET	1000	FIXED0%		📖 Selection list 1	Configuration of analog input signal, function block MFAIL ● Speed starting value for the deceleration in [%] of C0011	
C0978 STOP	CFG: DC-SET	1000	FIXED0%		📖 Selection list 1	Configuration of analog input signal, function block MFAIL ● Setting of the voltage setpoint on which the DC-bus voltage is to be kept (100 % = 1000 V)	
C0980	MFAIL Vp	0.500	0.001	{0.001}	31.000	Gain V_p, function block MFAIL	See System Manual (extension)
C0981	MFAIL Tn	100	20	{1 ms}	2000	Integral-action time T_n, function block MFAIL	
C0982	MFAIL Tir	2.000	0.001	{0.001 s}	16.000	Acceleration time T_{ir}, function block MFAIL	
C0983	Retrigger T	1.000	0.001	{0.001 s}	60.000	Retrigger time, function block MFAIL ● After the time has elapsed, the mains failure control is terminated	

Code		Possible settings					IMPORTANT	
No.	Name	Lenze	Selection					
C0988	Input signals		-199.99	{0.01 %}		199.99	Function block MFAIL ● Display of the signals linked in C0970, C0973, C0974, C0975, C0976, C0977 and C0978	See System Manual (extension)
1	DIS: N-SET							
2	DIS: ADAPT							
3	DIS: CONST							
4	DIS: THRESHLD							
5	DIS: NACT							
6	DIS: SET							
7	DIS: DC-SET							
C0989			0			1	Function block MFAIL ● Display of the signals linked in C0971 and C0972	
1	DIS: FAULT							
2	DIS: RESET							
C1000	DIVISION	1	0	{1}		31	Part factor, function block CONVPHA1 ● Calculate output signal: $OUT\,[\%] = IN\,[\%] \cdot \frac{100\,\%}{2^{14} \cdot 2^{C1000}}$	See System Manual (extension)
C1001 STOP	CFG: IN	1000	FIXED0INC		📖 Selection list 3		Configuration of input signal, function block CONVPHA1	
C1002	DIS: IN		-2147483648	{1}		2147483647	Function block CONVPHA1 ● Display of the signal linked in C1001	
C1040	Acceleration	100.000	0.001	{0.001 }		5000.000	Acceleration, function block SRFG1 ● Max. acceleration	See System Manual (extension)
C1041	Jerk	0.200	0.001	{0.001 s}		999.999	Jerk, function block SRFG1 ● S-ramp time	
C1042 STOP	CFG: IN	1000	FIXED0%		📖 Selection list 1		Configuration of analog input signal, function block SRFG1	
C1043 STOP	CFG: SET	1000	FIXED0%		📖 Selection list 1		Configuration of analog input signal, function block SRFG1 ● Starting value for the ramp function generator ● Starting value is accepted when SRFG1-LOAD = HIGH	
C1044 STOP	CFG: LOAD	1000	FIXED0		📖 Selection list 2		Configuration of digital input signal, function block SRFG1 ● HIGH = accepts the value at SRFG1-SET and outputs it to SRFG1-OUT. SRFG1-DIFF remains on 0 %	
C1045			-199.99	{0.01 %}		199.99	Function block SRFG1 ● Display of the signals linked in C1042 and C1043	
1	DIS: IN							
2	DIS: SET							
C1046	DIS: LOAD		0			1	Function block SRFG1 ● Display of the signal linked in C1044	
C1090	Output signal		-2147483648	{1}		2147483647	Function block FEVAN1 ● Display of the converted signal	See System Manual (extension)
C1091	Code	141	2	{1}		2000	Code, function block FEVAN1 ● Selection of the target code in which the calculated value is to be written	
C1092	Subcode	0	0	{1}		255	Subcode, function block FEVAN1 ● Selection of the target subcode in which the calculated value is to be written	

Code		Possible settings					IMPORTANT	
No.	Name	Lenze	Selection					
C1093	Numerator	1.0000	0.0001	{0.0001}		100000.0000	Numerator, function block FEVAN1 ● Scaling of the input signal	See System Manual (extension)
C1094	Denominator	0.0001	0.0001	{0.0001}		100000.0000	Denominator, function block FEVAN1 ● Scaling of the input signal	
C1095	Offset	0	0	{1}		1000000000	Offset, function block FEVAN1 ● An offset can be added to the converted signal	
C1096 STOP	CFG: IN	1000	FIXED0%			📖 Selection list 1	Configuration of analog input signal, function block FEVAN1	See System Manual (extension)
C1097 STOP	CFG: LOAD	1000	FIXED0			📖 Selection list 2	Configuration of digital input signal, function block FEVAN1 ● A LOW-HIGH edge transmits the converted signal to the target code	
C1098	DIS: IN		-32768	{1}		32767	Function block FEVAN1 ● Display of the signal linked in C1096	See System Manual (extension)
C1099	DIS: LOAD						Function block FEVAN1 ● Display of the signal linked in C1097	
C1100	Function	1					Function selection, function block FCNT1	See System Manual (extension)
			1	Return			At |counter content| ≥ |FCNT1-CMP-Val| FCNT1-EQUAL is set to HIGH for 1 ms	
			2	Hold if >=			At |counter content| ≥ |FCNT1-CMP-Val| the counter stops	
			3	Hold if =			At |counter content| = |FCNT1-CMP-Val| the counter stops	
C1101 STOP						📖 Selection list 1	Configuration of analog input signals, function block FCNT1	See System Manual (extension)
1	CFG: LD-VAL	1000	FIXED0%				● Starting value	
2	CFG: CMP-VAL	1000	FIXED0%				● Comparison value	
C1102 STOP						📖 Selection list 2	Configuration of digital input signals, function block FCNT1	See System Manual (extension)
1	CFG: CLKUP	1000	FIXED0				LOW-HIGH edge counts upwards by one	
2	CFG: CLKDWN	1000	FIXED0				LOW-HIGH edge counts downwards by one	
3	CFG: LOAD	1000	FIXED0				● HIGH = accepts starting value ● Input signal has highest priority	
C1103			-32768	{1}		32768	Function block FCNT1 ● Display of the signals linked in C1101	See System Manual (extension)
1	DIS: LD-VAL							
2	DIS: CMP-VAL							
C1104			0			1	Function block FCNT1 ● Display of the signals linked in C1102	
1	DIS: CLKUP							
2	DIS: CLKDWN							
3	DIS: LOAD							

Code		Possible settings				IMPORTANT	
No.	Name	Lenze	Selection				
C1160 STOP					🕮 Selection list 1	Configuration of analog input signals, function block ASW3	See System Manual (extension)
1	CFG: IN	1000	FIXED0%			ASW3-IN1	
2	CFG: IN	1000	FIXED0%			ASW3-IN2	
C1161 STOP	CFG: SET	1000	FIXED0		🕮 Selection list 2	Configuration of digital input signal, function block ASW3 ● LOW: signal at ASW3-IN1 is output to ASW3-OUT ● HIGH: signal at ASW3-IN2 is output to ASW3-OUT	
C1162			-199.99	{0.01 %}	199.99	Function block ASW3 ● Display of the signals linked in C1060	
1	DIS: IN					ASW3-IN1	
2	DIS: IN					ASW3-IN2	
C1163	DIS: SET					Function block ASW3 ● Display of the signal linked in C1061	
C1190		0				**Temperature characteristic for PTC thermistors** Selection of the characteristic for PTC thermistors at X7 or X8 for motor temperature detection	
			0	Standard		Characteristic for PTC thermistors in Lenze motors	
			1	Characteristic		Characteristic for application-specific PTC thermistors	
C1191			0	{1 °C}	255	**Temperature range for PTC thermistors** Specification of temperature points on the characteristic for PTC thermistors.	
1		100				Temperature point 1	
2		150				Temperature point 2	
C1192			0	{1 Ω}	3000	**Resistance range for PTC thermistors** Specification of resistance points on the characteristic for PTC thermistors.	
1		1670				Resistance point 1	
2		2225				Resistance point 2	
C1300 STOP	N-motor/ Dmax	300	-32767	{1 rpm}	32767	Motor speed at D_{max}, function block DCALC1 ● Nominal speed of the winding drive	🕮 8.2-1
C1301 STOP	N-line max	3000	1	{1 rpm}	32767	Maximum line speed, function block DCALC1 ● Nominal speed of the line drive	
C1302	calc cycle	0.1	0.1	{0.1 rev}	100.0	Calculation cycle, function block DCALC1	🕮 8.2-1
C1303	time const	0.10	0.01	{0.01 s}	50.00	Filter time constant, function block DCALC1	

Code		Possible settings					IMPORTANT	
No.	Name	Lenze	Selection					
C1304 STOP	Dmax	500	1	{1 mm}		10000	Maximum diameter, function block DCALC1 ● Nominal winding diameter	📖 8.2-1
C1305	lower D-limit	50	1	{1 mm}		10000	Lower diameter limit, function block DCALC1 ● Minimum winding diameter	
C1306	upper D-limit	500	1	{1 mm}		10000	Upper diameter limit, function block DCALC1 ● Maximum winding diameter	
C1307	hyst D-limit	1.00	0.00	{0.01 %}		100.0	Hysteresis - diameter limitation, function block DCALC1 ● Hysteresis for D_{min} /D_{max} output	
C1308 STOP	arit function	1	0	DCALC1-OUT=D		DCALC1-OUT = diameter	Selection of the arithmetic function, function block DCALC1	📖 8.2-1
			1	DCALC1-OUT=1/D		DCALC1-OUT = 1/diameter		
C1309 STOP	Dmin	50	1	{1 mm}		10000	Minimum diameter, function block DCALC1	📖 8.2-1
C1310	DCALC1-Titime	0.000	0.000	{0.001 s}		999.900	Acceleration and deceleration time, function block DCALC1	
C1311	window D-calc	1.00	0.00	{0.01 %}		100.00	Window - diameter calculation, function block DCALC1 ● Window setting for permissible diameter deviation	
C1320 STOP	CFG: SET	1000	FIXED0%			📖 Selection list 1	Configuration of analog input signal, function block DCALC1 ● The signal is scaled to the value in C1304 (100 % ≙ C1304)	📖 8.2-1
C1321 STOP						📖 Selection list 2	Configuration of digital input signals, function block DCALC1	
1	CFG: LOAD	1000	FIXED0				● HIGH: initial value at DCALC1-SET is accepted ● DCALC1-LOAD has a higher priority than DCALC1-HOLD	
2	CFG: HOLD	1000	FIXED0				● HIGH = holds the diameter value reached and resets the integrators.	
C1322			-36000	{1 rpm}		36000	Function block DCALC1 ● Display of the signals linked in C1327	📖 8.2-1
1	DIS: N-Line							
2	DIS: N-WIND							
C1325	DIS: SET		-199,99	{0.01 %}		199,99	Function block DCALC1 ● Display of the signal linked in C1320	
C1326			0			1	Function block DCALC1 ● Display of the signals linked in C1321	
1	DIS: LOAD							
2	DIS: HOLD							
C1327 STOP						📖 Selection list 3	Configuration of input signals, function block DCALC1	📖 8.2-1
1	CFG: N-Line	1000	FIXED0INC				● Speed signal of the line drive	
2	CFG: N-WIND	1000	FIXED0INC				● Speed signal of the winding drive	
C1328	DIS: D-ACT		-200	{1 mm}		200	Function block DCALC1 ● Display of the current diameter	

Code		Possible settings					IMPORTANT	
No.	Name	Lenze	Selection					
C1330	PCTRL2 Tir	1.0	0.1		{0.1 s	6000.0	Acceleration time t_{ir}, function block PCTRL2 ● Acceleration time for the setpoint ● The acceleration time refers to a setpoint change of 0 ... 100 %	See System Manual (extension)
C1331	PCTRL2 Tif	1.0	0.1		{0.1 s}	6000.0	Deceleration time t_{if}, function block PCTRL2 ● Deceleration time for the setpoint ● The deceleration time refers to a setpoint change of 100 % ... 0	
C1332	PCTRL2 Vp	1.0	0.1		{0.1 }	500.0	Gain V_p, function block PCTRL2	See System Manual (extension)
C1333	PCTRL2 Tn	400	20		{1 ms}	99999	Integral-action time T_n, function block PCTRL2 Setting of reset time T_n of PCTRL2	
C1334	PCTRL2 Kd	0.0	0.0		{0.1 }	5.0	Differential component K_d, function block PCTRL2	
C1335	bipolar/ unipolar	0					Sphere of action, function block PCTRL2	
			0	Bipolar			● Output value is limited to -100 ... 100 %	See System Manual (extension)
			1	Unipolar			● Output value is limited to 0 ... 100 %	
C1336	Tir overlay	1.0	0.1		{0.1 s}	6000.0	Fade-in time, function block PCTRL2 ● Acceleration time of the ramp generator ● Controls the influence of the process controller	See System Manual (extension)
C1337	Tif overlay	1.0	0.1		{0.1 s}	6000.0	Fade-out time, function block PCTRL2 ● Deceleration time of the ramp generator ● Controls the influence of the process controller	
C1340 STOP						📖 Selection list 1	Configuration of analog input signals, function block PCTRL2	See System Manual (extension)
1	CFG: RFG-SET	1000	FIXED0%				● The process setpoint is shown at PCTRL2-SET with a starting value via a ramp generator ● PCTRL-RFG-LOAD = HIGH activates the function	
2	CFG: SET	1000	FIXED0%				● Input for process value ● Value range: ±200 %	
3	CFG: ACT	1000	FIXED0%				● Input for actual value ● Value range: ±200 %	
4	CFG: INFL	1000	FIXED0%				● Evaluation (influence) of the output signal ● Value range: ±200 %	

Code		Possible settings				IMPORTANT	
No.	Name	Lenze	Selection				
C1341 STOP					📖 Selection list 2	Configuration of digital input signals, function block PCTRL2	See System Manual (extension)
1	CFG: RFG-LOAD	1000	FIXED0			● HIGH = function of PCTRL2-RFG-SET is active	
2	CFG: I-OFF	1000	FIXED0			● HIGH = Switches of integral action component ● LOW = switches on integral action component	
3	CFG: INACT	1000	FIXED0			● HIGH = deactivates process controller	
4	CFG: OVERLAY	1000	FIXED0			● HIGH = Shows influence ● LOW = hides influence	
C1344			-199.99	{0.01 %}	199.99	Function block PCTRL2 ● Display of the signals linked in C1340	See System Manual (extension)
1	DIS: RFG-SET						
2	DIS: SET						
3	DIS: ACT						
4	DIS: INFL						
C1345			0		1	Function block PCTRL2 ● Display of the signals linked in C1341	
1	DIS: RFG-LOAD						
2	DIS: I-OFF						
3	DIS: INACT						
4	DIS: OVERLAY						
C1350	INT1 function	0				Function selection, function block INT1	See System Manual (extension)
			0	PHI >= REF		If INT1-IN ≥ INT1-REF, INT1-DOUT is set to HIGH	
			1	|PHI| >= |REF|		If |INT1-IN| ≥ |INT1-REF|, INT1-DOUT is set to HIGH	
C1351	INT1 scaling	65536 00	65536	{1}	1000000000	Scaling factor, function block INT1 $\text{INT1} - \text{AOUT}\,[\%] = \frac{\text{INT1} - \text{IN}\,[\text{inc}]}{\text{C1351}} \cdot 100\,\%$	
C1354 STOP	CFG: REF	1000	FIXED0INC		📖 Selection list 3	Input signal configuration ● Reference value	See System Manual (extension)
C1355 STOP	CFG: IN	1000	FIXEDPHI-0		📖 Selection list 4	Configuration of input signal, function block INT1 ● Angle of rotation	
C1356 STOP	CFG: RESET	1000	FIXED0		📖 Selection list 2	Configuration of digital input signal, function block INT1 ● HIGH = Sets the integrator to 0	
C1357	DIS: REF		-2000000000	{1 inc}	2000000000	Function block INT1 ● Display of the signal linked in C13554	See System Manual (extension)
C1358	DIS: IN		-32767	{1 rpm}	32767	Function block INT1 ● Display of the signal linked in C1355	
C1359	DIS: RESET		0		1	Function block INT1 ● Display of the signal linked in C1356	
C1360	INT2 function	0				Function selection, function block INT2	See System Manual (extension)
			0	PHI >= REF		If INT2-IN ≥ INT2-REF, INT2-DOUT is set to HIGH	
			1	|PHI| >= |REF|		If |INT2-IN| ≥ |INT2-REF|, INT2-DOUT is set to HIGH	
C1361	INT2 scaling	65536 00	65536	{1}	1000000000	Scaling factor, function block INT2 $\text{INT2} - \text{AOUT}\,[\%] = \frac{\text{INT2} - \text{IN}\,[\text{inc}]}{\text{C1361}} \cdot 100\,\%$	

Code		Possible settings				IMPORTANT	
No.	Name	Lenze	Selection				
C1364 STOP	CFG: REF	1000	FIXED0INC		📖 Selection list 3	Input signal configuration ● Reference value	See System Manual (extension)
C1365 STOP	CFG: IN	1000	FIXEDPHI-0		📖 Selection list 4	Configuration of input signal, function block INT2 ● Angle of rotation	
C1366 STOP	CFG: RESET	1000	FIXED0		📖 Selection list 2	Configuration of digital input signal, function block INT2 ● HIGH = Sets the integrator to 0	
C1367	DIS: REF		-2000000000	{1 inc}	2000000000	Function block INT2 ● Display of the signal linked in C13564	See System Manual (extension)
C1368	DIS: IN		-32767	{1 rpm}	32767	Function block INT2 ● Display of the signal linked in C1365	
C1369	DIS: RESET		0		1	Function block INT2 ● Display of the signal linked in C1366	
C1370	FOLL max	100.00	0.00	{0.01 %}	199.99	Upper limit, function block FOLL1 ● Upper limit of the ramp function generator	See System Manual (extension)
C1371	FOLL min	-100.00	-199.99	{0.01 %}	0.00	Lower limit, function block FOLL1 ● Lower limit of the ramp function generator	
C1372	FOLL Tir	10.0	0.1	{0.1 s}	6000.0	Acceleration time T_{ir} and deceleration time T_{if} of the ramp function generator, function block FOLL1	
C1373	FOLL Tif	10.0	0.1	{0.1 s}	6000.0		
C1375 STOP					📖 Selection list 1	Configuration of analog input signals, function block FOLL1	See System Manual (extension)
1	CFG: SIGN	1000	FIXED0%			● Negative value: signal characteristic at FOLL1-OUT is opposed to the one at FOLL1-IN ● Positive value: signal characteristic at FOLL1-OUT is the same as at FOLL1-IN	
2	CFG: IN	1000	FIXED0%			If FOLL1-IN > FOLL1-REF, the ramp function generator starts	
3	CFG: REF	1000	FIXED0%			Reference value	
4	CFG: LOAD	1000	FIXED0%			Initial value for the ramp function generator	
C1376 STOP	CFG: SET	1000	FIXED0		📖 Selection list 2	Configuration of digital input signal, function block FOLL1 ● HIGH: initial value at FOLL1-LOAD is accepted	
C1377			-199.99	{0.01 %}	199.99	Function block FOLL1 ● Display of the signals linked in C1375	See System Manual (extension)
1	DIS: SIGN						
2	DIS: IN						
3	DIS: REF						
4	DIS: LOAD						
C1378	DIS: SET		0		1	Function block FOLL1 ● Display of the signal linked in C1376	

Code		Possible settings				IMPORTANT	
No.	Name	Lenze	Selection				
C1583	fset high	100.00	0.00	{0.01 %}	199.99	**Alterations by Lenze service only!** Adaptation of the motor magnetising current set in C0095 (with V/f characteristic control: influence limit of the boost correction; with vector control: influence limit of the field precontrol) ● The output frequency is set up to which the motor magnetising current set in C0095 is to have an effect. ● C1583 = 100 % ≙ half the rated motor frequency in C0089	📖 6.11-5
C1751 STOP			0	{1}	65535	Inverter compensation characteristic (WRK) ● During the motor parameter identification, the characteristic is calculated from the measured motor stator resistance and saved in C1751/1 ... C1751/17	📖 6.6-14
1		0					
...		...					
17		0					
C1753 STOP			0	Data are not o. k.		Internal data are o. k. ● Motor data identification for the inverter compensation characteristic has been completed successfully	
			1	Data are o. k.			
C1754 STOP			0	Data are not o. k.		Internal data are o. k. ● Motor data identification for the motor leakage inductance has been completed successfully	
			1	Data are o. k.			
C1755 STOP		100	0	{1}	65535	Image of inverter compensation characteristic (WRK) on the maximum current range	

8.6 Selection lists

8.6.1 Selection list 1: Analog output signals

Parameter	Analog output signal (O)
000050	AIN1-OUT
000055	AIN2-OUT
000100	DFSET-NOUT
001000	FIXED0%
001006	FIXED100%
001007	FIXED-100%
005000	MCTRL-nset2
005001	MCTRL-NACT
005002	MCTRL-MSET2
005003	MCTRL-MACT
005004	MCTRL-IACT
005005	MCTRL-DCVOLT
005006	MCTRL-VACT
005007	MCTRL-FACT
005008	MCTRL-IxT
005009	MCTRL-PHI-ACT
005010	MCTRL-M-TEMP
005015	MCTRL-BOOST
005050	NSET-NOUT
005051	NSET-RFG-I
005052	NSET-C10-C11
005100	MPOT1-OUT
005150	PCTRL1-OUT
005250	NLIM1-OUT
005500	ARIT1-OUT
005505	ARIT2-OUT
005510	ARIT3-OUT
005540	SQRT1-OUT
005550	ADD1-OUT
005555	ADD2-OUT
005600	RFG1-OUT
005610	SRFG1-OUT
005611	SRFG1-DIFF
005650	ASW1-OUT
005655	ASW2-OUT
005660	ASW3-OUT

Parameter	Analog output signal (O)
005700	ANEG1-OUT
005705	ANEG2-OUT
005750	FIXSET1-OUT
005800	LIM1-OUT
005850	ABS1-OUT
005900	PT1-1-OUT
005905	PT1-2-OUT
005950	DT1-1-OUT
006100	MFAIL-NOUT
006150	DB1-OUT
006200	CONV1-OUT
006205	CONV2-OUT
006210	CONV3-OUT
006215	CONV4-OUT
006230	CONVPHA1-OUT
006300	S&H1-OUT
006350	CURVE1-OUT
006400	FCNT1-OUT
010000	BRK1-M-SET
011000	DCALC1-D-OUT
011001	DCALC1-OUT
011050	PCTRL2-OUT
011100	INT1-AOUT
011105	INT2-AOUT
011150	FOLL1-OUT
015030	MCTRL-LOAD-I2XT
019500	FCODE-17
019502	FCODE-26/1
019503	FCODE-26/2
019504	FCODE-27/1
019505	FCODE-27/2
019506	FCODE-32
019507	FCODE-37
019510	FCODE-108/1
019511	FCODE-108/2
019512	FCODE-109/1

Parameter	Analog output signal (O)
019513	FCODE-109/2
019515	FCODE-141
019521	FCODE-472/1
019522	FCODE-472/2
019523	FCODE-472/3
019524	FCODE-472/4
019525	FCODE-472/5
019526	FCODE-472/6
019527	FCODE-472/7
019528	FCODE-472/8
019529	FCODE-472/9
019530	FCODE-472/10
019531	FCODE-472/11
019532	FCODE-472/12
019533	FCODE-472/13
019534	FCODE-472/14
019535	FCODE-472/15
019536	FCODE-472/16
019537	FCODE-472/17
019538	FCODE-472/18
019539	FCODE-472/19
019540	FCODE-472/20
019551	FCODE-473/1

Parameter	Analog output signal (O)
019552	FCODE-473/2
019553	FCODE-473/3
019554	FCODE-473/4
019555	FCODE-473/5
019556	FCODE-473/6
019557	FCODE-473/7
019558	FCODE-473/8
019559	FCODE-473/9
019560	FCODE-473/10
020101	CAN-IN1.W1
020102	CAN-IN1.W2
020103	CAN-IN1.W3
020201	CAN-IN2.W1
020202	CAN-IN2.W2
020203	CAN-IN2.W3
020204	CAN-IN2.W4
020301	CAN-IN3.W1
020302	CAN-IN3.W2
020303	CAN-IN3.W3
020304	CAN-IN3.W4
025101	AIF-IN.W1
025102	AIF-IN.W2
025103	AIF-IN.W3

8.6.2 Selection list 2: Digital output signals

Parameter	Digital output signal (☐)
000051	DIGIN1
000052	DIGIN2
000053	DIGIN3
000054	DIGIN4
000055	DIGIN5
000056	DIGIN6(ST)
000065	DIGIN-CINH
000100	DFSET-ACK
000500	DCTRL-RDY
000501	DCTRL-CINH
000502	DCTRL-INIT
000503	DCTRL-IMP
000504	DCTRL-NACT=0
000505	DCTRL-CW/CCW
001000	FIXED0
001001	FIXED1
002000	DCTRL-PAR*1
002001	DCTRL-PAR*2
002002	DCTRL-PAR-BUSY
005001	MCTRL-QSP-OUT
005002	MCTRL-IMAX
005003	MCTRL-MMAX
005006	MCTRL-GSB-OUT
005050	NSET-RFG-I=0
006000	DFRFG1-FAIL
006001	DFRFG1-SYNC
006100	MFAIL-STATUS
006101	MFAIL-I-RESET
006400	FCNT1-EQUAL
010000	BRK1-OUT
010001	BRK1-CINH
010002	BRK1-QSP
010003	BRK1-M-STORE
010250	R/L/Q-QSP
010251	R/L/Q-R/L
010500	AND1-OUT
010505	AND2-OUT
010510	AND3-OUT
010515	AND4-OUT

Parameter	Digital output signal (☐)
010520	AND5-OUT
010550	OR1-OUT
010555	OR2-OUT
010560	OR3-OUT
010565	OR4-OUT
010570	OR5-OUT
010600	NOT1-OUT
010605	NOT2-OUT
010610	NOT3-OUT
010615	NOT4-OUT
010620	NOT5-OUT
010650	CMP1-OUT
010655	CMP2-OUT
010660	CMP3-OUT
010665	CMP4-OUT
010700	DIGDEL1-OUT
010705	DIGDEL2-OUT
010750	TRANS1-OUT
010755	TRANS2-OUT
010900	FLIP1-OUT
010905	FLIP2-OUT
011000	DCALC1-DMAX
011001	DCALC1-DMIN
011002	DCALC1-I=0
011003	DCALC1-OVFL
011100	INT1-DOUT
011105	INT2-DOUT
013000	FEVAN1-BUSY
013001	FEVAN1-FAIL
015000	DCTRL-TRIP
015001	DCTRL-MESS
015002	DCTRL-WARN
015003	DCTRL-FAIL
015010	MONIT-LU
015011	MONIT-OU
015012	MONIT-EEr
015013	MONIT-OC1
015014	MONIT-OC2
015015	MONIT-LP1
015016	MONIT-OH
015017	MONIT-OH3

Parameter	Digital output signal (□)
015018	MONIT-OH4
015019	MONIT-OH7
015020	MONIT-OH8
015022	MONIT-SD3
015026	MONIT-CE0
015027	MONIT-NMAX
015028	MONIT-OC5
015029	MONIT-SD5
015030	MONIT-SD6
015032	MONIT-H07
015033	MONIT-H10
015034	MONIT-H11
015040	MONIT-CE1
015041	MONIT-CE2
015042	MONIT-CE3
015043	MONIT-CE4
015044	MONIT-OC3
015045	MONIT-ID1
015046	MONIT-ID2
015047	MONIT-OC6
015048	MONIT-OC8
019500	FCODE-250
019521	FCODE-471.B0
019522	FCODE-471.B1
019523	FCODE-471.B2
019524	FCODE-471.B3
019525	FCODE-471.B4
019526	FCODE-471.B5
019527	FCODE-471.B6
019528	FCODE-471.B7
019529	FCODE-471.B8
019530	FCODE-471.B9
019531	FCODE-471.B10
019532	FCODE-471.B11
019533	FCODE-471.B12
019534	FCODE-471.B13
019535	FCODE-471.B14
019536	FCODE-471.B15
019537	FCODE-471.B16
019538	FCODE-471.B17
019539	FCODE-471.B18
019540	FCODE-471.B19
019541	FCODE-471.B20
019542	FCODE-471.B21
019543	FCODE-471.B22
019544	FCODE-471.B23

Parameter	Digital output signal (□)
019545	FCODE-471.B24
019546	FCODE-471.B25
019547	FCODE-471.B26
019548	FCODE-471.B27
019549	FCODE-471.B28
019550	FCODE-471.B29
019551	FCODE-471.B30
019552	FCODE-471.B31
019751	FCODE-135.B0
019752	FCODE-135.B1
019753	FCODE-135.B2
019755	FCODE-135.B4
019756	FCODE-135.B5
019757	FCODE-135.B6
019758	FCODE-135.B7
019763	FCODE-135.B12
019764	FCODE-135.B13
019765	FCODE-135.B14
019766	FCODE-135.B15
020001	CAN-CTRL.B0
020002	CAN-CTRL.B1
020003	CAN-CTRL.B2
020005	CAN-CTRL.B4
020006	CAN-CTRL.B5
020007	CAN-CTRL.B6
020008	CAN-CTRL.B7
020013	CAN-CTRL.B12
020014	CAN-CTRL.B13
020015	CAN-CTRL.B14
020016	CAN-CTRL.B15
020101	CAN-IN1.B0
020102	CAN-IN1.B1
020103	CAN-IN1.B2
020104	CAN-IN1.B3
020105	CAN-IN1.B4
020106	CAN-IN1.B5
020107	CAN-IN1.B6
020108	CAN-IN1.B7
020109	CAN-IN1.B8
020110	CAN-IN1.B9
020111	CAN-IN1.B10
020112	CAN-IN1.B11

Parameter	Digital output signal (□)
020113	CAN-IN1.B12
020114	CAN-IN1.B13
020115	CAN-IN1.B14
020116	CAN-IN1.B15
020117	CAN-IN1.B16
020118	CAN-IN1.B17
020119	CAN-IN1.B18
020120	CAN-IN1.B19
020121	CAN-IN1.B20
020122	CAN-IN1.B21
020123	CAN-IN1.B22
020124	CAN-IN1.B23
020125	CAN-IN1.B24
020126	CAN-IN1.B25
020127	CAN-IN1.B26
020128	CAN-IN1.B27
020129	CAN-IN1.B28
020130	CAN-IN1.B29
020131	CAN-IN1.B30
020132	CAN-IN1.B31
020201	CAN-IN2.B0
020202	CAN-IN2.B1
020203	CAN-IN2.B2
020204	CAN-IN2.B3
020205	CAN-IN2.B4
020206	CAN-IN2.B5
020207	CAN-IN2.B6
020208	CAN-IN2.B7
020209	CAN-IN2.B8
020210	CAN-IN2.B9
020211	CAN-IN2.B10
020212	CAN.IN2.B11
020213	CAN-IN2.B12
020214	CAN-IN2.B13
020215	CAN-IN2.B14
020216	CAN-IN2.B15
020217	CAN-IN2.B16
020218	CAN-IN2.B17
020219	CAN-IN2.B18
020220	CAN-IN2.B19
020221	CAN-IN2.B20
020222	CAN-IN2.B21

Parameter	Digital output signal (□)
020223	CAN-IN2.B22
020224	CAN-IN2.B23
020225	CAN-IN2.B24
020226	CAN-IN2.B25
020227	CAN-IN2.B26
020228	CAN-IN2.B27
020229	CAN-IN2.B28
020230	CAN-IN2.B29
020231	CAN-IN2.B30
020232	CAN-IN2.B31
020301	CAN-IN3.B0
020302	CAN-IN3.B1
020303	CAN-IN3.B2
020304	CAN-IN3.B3
020305	CAN-IN3.B4
020306	CAN-IN3.B5
020307	CAN-IN3.B6
020308	CAN-IN3.B7
020309	CAN-IN3.B8
020310	CAN-IN3.B9
020311	CAN-IN3.B10
020312	CAN-IN3.B11
020313	CAN-IN3.B12
020314	CAN-IN3.B13
020315	CAN-IN3.B14
020316	CAN-IN3.B15
020317	CAN-IN3.B16
020318	CAN-IN3.B17
020319	CAN-IN3.B18
020320	CAN-IN3.B19
020321	CAN-IN3.B20
020322	CAN-IN3.B21
020323	CAN-IN3.B22
020324	CAN-IN3.B23
020325	CAN-IN3.B24
020326	CAN-IN3.B25
020327	CAN-IN3.B26
020328	CAN-IN3.B27
020329	CAN-IN3.B28
020330	CAN-IN3.B29
020331	CAN-IN3.B30
020332	CAN-IN3.B31

Parameter	Digital output signal (□)
020400	CAN-SYNC-OUT
025001	AIF-CTRL.B0
025002	AIF-CTRL.B1
025003	AIF-CTRL.B2
025005	AIF-CTRL.B4
025006	AIF-CTRL.B5
025007	AIF-CTRL.B6
025008	AIF-CTRL.B7
025013	AIF-CTRL.B12
025014	AIF-CTRL.B13
025015	AIF-CTRL.B14
025016	AIF-CTRL.B15
025101	AIF-IN.B0
025102	AIF-IN.B1
025103	AIF-IN.B2
025104	AIF-IN.B3
025105	AIF-IN.B4
025106	AIF-IN.B5
025107	AIF-IN.B6
025108	AIF-IN.B7
025109	AIF-IN.B8
025110	AIF-IN.B9

Parameter	Digital output signal (□)
025111	AIF-IN.B10
025112	AIF-IN.B11
025113	AIF-IN.B12
025114	AIF-IN.B13
025115	AIF-IN.B14
025116	AIF-IN.B15
025117	AIF-IN.B16
025118	AIF-IN.B17
025119	AIF-IN.B18
025120	AIF-IN.B19
025121	AIF-IN.B20
025122	AIF-IN.B21
025123	AIF-IN.B22
025124	AIF-IN.B23
025125	AIF-IN.B24
025126	AIF-IN.B25
025127	AIF-IN.B26
025128	AIF-IN.B27
025129	AIF-IN.B28
025130	AIF-IN.B29
025131	AIF-IN.B30
025132	AIF-IN.B31

8.6.3 Selection list 3: Angle signals

Parameter	Phase signal (▲)
000100	DFSET-PSET
001000	FIXED0INC
005000	MCTRL-PHI-ANG
011100	INT1-POUT
011105	INT2-POUT

Parameter	Phase signal (▲)
019521	FCODE-474/1
019522	FCODE-474/2
020103	CAN-IN1.D1
020201	CAN-IN2.D1
020301	CAN-IN3.D1
025103	AIF-IN.D1

8.6.4 Selection list 4: Speed signals

Parameter	Speed signal (△)
000050	DFIN-OUT
000100	DFSET-POUT
000250	DFOUT-OUT
001000	FIXEDPHI-0

Parameter	Speed signal (△)
005000	MCTRL-PHI-ACT
006000	DFRFG-OUT
006220	CONV5-OUT
019521	FCODE-475/1
019522	FCODE-475/2

8.6.5 Selection list 5: Function blocks

Parameter	Function block
000000	empty
000050	AIN1
000055	AIN2
000070	AOUT1
000075	AOUT2
000100	DFSET
000200	DFIN
000250	DFOUT
005050	NSET
005100	MPOT1
005150	PCTRL1
005250	NLIM1
005500	ARIT1
005505	ARIT2
005510	ARIT3
005540	SQRT1
005550	ADD1
005555	ADD2
005600	RFG1
005610	SRFG1
005650	ASW1
005655	ASW2
005660	ASW3
005700	ANEG1
005705	ANEG2
005750	FIXSET1
005800	LIM1
005850	ABS1
005900	PT1-1
005905	PT1-2
005950	DT1-1
006000	DFRFG1
006100	MFAIL
006150	DB1
006200	CONV1
006205	CONV2
006210	CONV3
006215	CONV4
006220	CONV5
006230	CONVPHA1

Parameter	Function block
006300	S&H1
006350	CURVE1
006400	FCNT1
010000	BRK1
010250	R/L/Q
010500	AND1
010505	AND2
010510	AND3
010515	AND4
010520	AND5
010550	OR1
010555	OR2
010560	OR3
010565	OR4
010570	OR5
010600	NOT1
010605	NOT2
010610	NOT3
010615	NOT4
010620	NOT5
010650	CMP1
010655	CMP2
010660	CMP3
010665	CMP4
010700	DIGDEL1
010705	DIGDEL2
010750	TRANS1
010755	TRANS2
010900	FLIP1
010905	FLIP2
011000	DCALC1
011050	PCTRL2
011100	INT1
011105	INT2
011150	FOLL1
013000	FEVAN1
013100	OSZ
015100	MLP1
020000	CAN-OUT
025000	AIF-OUT

8.7 Table of attributes

The attribute table describes the properties of the codes used. It enables you to create your own communication programs for the controller.

How to read the table of attributes

Column		Abbreviation	Meaning	
Code		Cxxxx	Name of the Lenze code	
Index	dec	24575 - Lenze code number	Index under which the parameter is addressed The subindex of array variables corresponds to the Lenze subcode number	Is only required for control via INTERBUS, PROFIBUS DP or system bus (CAN)
	hex	5FFFh - Lenze code number		
Data	DS	E	Data structure	Single variable (only one parameter element)
		A		Array variable (several parameter elements)
	DA	xx	Number of array elements (subcodes)	
	DT	B8	Data type	1 byte bit-coded
		B16		2 bytes bit-coded
		B32		4 bytes bit-coded
		FIX32		32-bit value with sign; decimal with four decimal places
		I32		4 bytes with sign
		U32		4 bytes without sign
		VS		ASCII string
	Format	VD	LECOM format (see also Operating Instructions of the bus module)	ASCII decimal format
		VH		ASCII hexadecimal format
		VS		String format
		VO		Octet string format for data blocks
	DL		Data length in byte	The column "Important" contains further information
Access	LCM-R/W	Ra	Access authorisation for LECOM	Reading is always permitted
		Wa		Writing is always permitted
		W		Writing is restricted
	Condition	CINH	Condition for writing	Writing permitted only when controller is inhibited

Code	Controller		Index		Data					Access	
	EVF9321 ... EVF9333	EVF9335 ... EVF9383	dec	hex	DS	DA	DT	Format	DL	LCM-R/W	Condition
C0002	♦	♦	24573	5FFD	E	1	FIX32	VD	4	Ra/W	CINH
C0003	♦	♦	24572	5FFC	E	1	FIX32	VD	4	Ra/Wa	
C0004	♦	♦	24571	5FFB	E	1	FIX32	VD	4	Ra/Wa	
C0005	♦	♦	24570	5FFA	E	1	FIX32	VD	4	Ra/W	CINH
C0006	♦	♦	24569	5FF9	E	1	FIX32	VD	4	Ra/W	CINH
C0009	♦	♦	24566	5FF6	E	1	FIX32	VD	4	Ra/Wa	
C0010	♦	♦	24565	5FF5	E	1	FIX32	VD	4	Ra/Wa	
C0011	♦	♦	24564	5FF4	E	1	FIX32	VD	4	Ra/Wa	
C0012	♦	♦	24563	5FF3	E	1	FIX32	VD	4	Ra/Wa	
C0013	♦	♦	24562	5FF2	E	1	FIX32	VD	4	Ra/Wa	
C0014	♦	♦	24561	5FF1	E	1	FIX32	VD	4	Ra/Wa	
C0015	♦	♦	24560	5FF0	E	1	FIX32	VD	4	Ra/Wa	
C0016	♦	♦	24559	5FsF	E	1	FIX32	VD	4	Ra/Wa	
C0017	♦	♦	24558	5FEE	E	1	FIX32	VD	4	Ra/Wa	
C0018	♦	♦	24557	5FED	E	1	FIX32	VD	4	Ra/Wa	
C0019	♦	♦	24556	5FEC	E	1	FIX32	VD	4	Ra/Wa	
C0020	♦	♦	24555	5FEB	E	1	FIX32	VD	4	Ra/Wa	
C0021	♦	♦	24554	5FEA	E	1	FIX32	VD	4	Ra/Wa	
C0022	♦	♦	24553	5FE9	E	1	FIX32	VD	4	Ra/Wa	
C0023	♦	♦	24552	5FE8	E	1	FIX32	VD	4	Ra/Wa	
C0025	♦	♦	24550	5FE6	E	1	FIX32	VD	4	Ra/W	CINH
C0026	♦	♦	24549	5FE5	A	2	FIX32	VD	4	Ra/Wa	
C0027	♦	♦	24548	5FE4	A	2	FIX32	VD	4	Ra/Wa	
C0030	♦	♦	24545	5FE1	E	1	FIX32	VD	4	Ra/Wa	
C0032	♦	♦	24543	5FDF	E	1	FIX32	VD	4	Ra/Wa	
C0033	♦	♦	24542	5FDE	E	1	FIX32	VD	4	Ra/Wa	
C0034	♦	♦	24541	5FDD	E	1	FIX32	VD	4	Ra/Wa	
C0036	♦	♦	24539	5FDB	E	1	FIX32	VD	4	Ra/Wa	
C0037	♦	♦	24538	5FDA	E	1	FIX32	VD	4	Ra/Wa	
C0038	♦	♦	24537	5FD9	A	6	FIX32	VD	4	Ra/Wa	
C0039	♦	♦	24536	5FD8	A	15	FIX32	VD	4	Ra/Wa	
C0040	♦	♦	24535	5FD7	E	1	FIX32	VD	4	Ra/Wa	
C0042	♦	♦	24533	5FD5	E	1	FIX32	VD	4	Ra	
C0043	♦	♦	24532	5FD4	E	1	FIX32	VD	4	Ra/Wa	
C0045	♦	♦	24530	5FD2	E	1	FIX32	VD	4	Ra	
C0046	♦	♦	24529	5FD1	E	1	FIX32	VD	4	Ra	
C0049	♦	♦	24526	5FCE	E	1	FIX32	VD	4	Ra	
C0050	♦	♦	24525	5FCD	E	1	FIX32	VD	4	Ra	
C0051	♦	♦	24524	5FCC	E	1	FIX32	VD	4	Ra	
C0052	♦	♦	24523	5FCB	E	1	FIX32	VD	4	Ra	
C0053	♦	♦	24522	5FCA	E	1	FIX32	VD	4	Ra	
C0054	♦	♦	24521	5FC9	E	1	FIX32	VD	4	Ra	
C0056	♦	♦	24519	5FC7	E	1	FIX32	VD	4	Ra	
C0057	♦	♦	24518	5FC6	E	1	FIX32	VD	4	Ra	
C0058	♦	♦	24517	5FC5	E	1	FIX32	VD	4	Ra	

Code	Controller		Index		Data					Access	
	EVF9321 ... EVF9333	EVF9335 ... EVF9383	dec	hex	DS	DA	DT	Format	DL	LCM-R/W	Condition
C0059	•	•	24516	5FC4	E	1	FIX32	VD	4	Ra	
C0061	•	•	24514	5FC2	E	1	FIX32	VD	4	Ra	
C0063	•	•	24512	5FC0	E	1	FIX32	VD	4	Ra	
C0064	•	•	24511	5FBF	E	1	FIX32	VD	4	Ra	
C0066	•	•	24509	5FBD	E	1	FIX32	VD	4	Ra	
C0067	•	•	24508	5FBC	E	1	FIX32	VD	4	Ra	
C0070	•	•	24505	5FB9	E	1	FIX32	VD	4	Ra/Wa	
C0071	•	•	24504	5FB8	E	1	FIX32	VD	4	Ra/Wa	
C0074	•	•	24501	5FB5	E	1	FIX32	VD	4	Ra/Wa	
C0075	•	•	24500	5FB4	E	1	FIX32	VD	4	Ra/Wa	
C0076	•	•	24499	5FB3	E	1	FIX32	VD	4	Ra/Wa	
C0077	•	•	24498	5FB2	E	1	FIX32	VD	4	Ra/Wa	
C0078	•	•	24497	5FB1	E	1	FIX32	VD	4	Ra/Wa	
C0079	•	•	24496	5FB0	E	1	FIX32	VD	4	Ra/Wa	
C0080	•	•	24495	5FAF	E	1	FIX32	VD	4	Ra/Wa	
C0081	•	•	24494	5FAE	E	1	FIX32	VD	4	Ra/W	CINH
C0082	•	•	24493	5FAD	E	1	FIX32	VD	4	Ra/W	CINH
C0084	•	•	24491	5FAB	E	1	FIX32	VD	4	Ra/W	CINH
C0085	•	•	24490	5FAA	E	1	FIX32	VD	4	Ra/W	CINH
C0086	•	•	24489	5FA9	E	1	FIX32	VD	4	Ra/W	CINH
C0087	•	•	24488	5FA8	E	1	FIX32	VD	4	Ra/W	CINH
C0088	•	•	24487	5FA7	E	1	FIX32	VD	4	Ra/W	CINH
C0089	•	•	24486	5FA6	E	1	FIX32	VD	4	Ra/W	CINH
C0090	•	•	24485	5FA5	E	1	FIX32	VD	4	Ra/W	CINH
C0091	•	•	24484	5FA4	E	1	FIX32	VD	4	Ra/W	CINH
C0092	•	•	24483	5FA3	E	1	FIX32	VD	4	Ra/W	CINH
C0093	•	•	24482	5FA2	E	1	FIX32	VD	4	Ra	
C0094	•	•	24481	5FA1	E	1	FIX32	VD	4	Ra/Wa	
C0095	•	•	24480	5FA0	E	1	FIX32	VD	4	Ra/W	CINH
C0096	•	•	24479	5F9F	A	2	FIX32	VD	4	Ra/Wa	
C0099	•	•	24476	5F9C	E	1	FIX32	VD	4	Ra	
C0101	•	•	24474	5F9A	A	15	FIX32	VD	4	Ra/Wa	
C0103	•	•	24472	5F98	A	15	FIX32	VD	4	Ra/Wa	
C0104	•	•	24471	5F97	E	1	FIX32	VD	4	Ra/W	CINH
C0105	•	•	24470	5F96	E	1	FIX32	VD	4	Ra/Wa	
C0107	•	•	24478	5F94	E	1	FIX32	VD	4	Ra/Wa	
C0108	•	•	24467	5F93	A	2	FIX32	VD	4	Ra/Wa	
C0109	•	•	24466	5F92	A	2	FIX32	VD	4	Ra/Wa	
C0114	•	•	24461	5F8D	A	6	FIX32	VD	4	Ra/Wa	
C0116	•	•	24459	5F8B	A	32	FIX32	VD	4	Ra/W	CINH
C0117	•	•	24458	5F8A	A	4	FIX32	VD	4	Ra/W	CINH
C0118	•	•	24457	5F89	A	4	FIX32	VD	4	Ra/Wa	
C0120	•	•	24455	5F87	E	1	FIX32	VD	4	Ra/Wa	
C0121	•	•	24454	5F86	E	1	FIX32	VD	4	Ra/Wa	
C0122	•	•	24453	5F85	E	1	FIX32	VD	4	Ra/Wa	

Code	Controller		Index		Data					Access	
	EVF9321 ... EVF9333	EVF9335 ... EVF9383	dec	hex	DS	DA	DT	Format	DL	LCM-R/W	Condition
C0125	♦	♦	24450	5F82	E	1	FIX32	VD	4	Ra/Wa	
C0126	♦	♦	24449	5F81	E	1	FIX32	VD	4	Ra/Wa	
C0127	♦	♦	24448	5F80	E	1	FIX32	VD	4	Ra/Wa	
C0128	♦	♦	24447	5F7F	E	1	FIX32	VD	4	Ra/Wa	
C0130	♦	♦	24445	5F7D	E	1	FIX32	VD	4	Ra	
C0132	♦	♦	24443	5F7B	E	1	FIX32	VD	4	Ra/W	CINH
C0133	♦	♦	24442	5F7A	E	1	FIX32	VD	4	Ra/W	CINH
C0134	♦	♦	24441	5F79	E	1	FIX32	VD	4	Ra/Wa	
C0135	♦	♦	24440	5F78	E	1	B16	VH	2		
C0136	♦	♦	24439	5F77	A	3	B16	VH	2	Ra	
C0140	♦		24435	5F73	E	1	FIX32	VD	4	Ra/Wa	
C0141	♦	♦	24434	5F72	E	1	FIX32	VD	4	Ra/Wa	
C0142	♦	♦	24433	5F71	E	1	FIX32	VD	4	Ra/Wa	
C0143	♦	♦	24432	5F70	E	1	FIX32	VD	4	Ra/Wa	
C0144	♦	♦	24431	5F6F	E	1	FIX32	VD	4	Ra/W	CINH
C0145	♦	♦	24430	5F6E	E	1	FIX32	VD	4	Ra/W	CINH
C0146	♦	♦	24429	5F6D	E	1	FIX32	VD	4	Ra/Wa	
C0147	♦	♦	24428	5F6C	E	1	FIX32	VD	4	Ra/Wa	
C0148	♦	♦	24427	5F6B	E	1	FIX32	VD	4	Ra/W	CINH
C0149	♦	♦	24426	5F6A	E	1	FIX32	VD	4	Ra/W	CINH
C0150	♦	♦	24425	5F69	E	1	B16	VH	2	Ra	
C0151	♦	♦	24424	5F68	E	1	B32	VH	4	Ra	
C0155	♦	♦	24420	5F64	E	1	B16	VH	2	Ra	
C0156	♦	♦	24419	5F63	A	7	FIX32	VD	4	Ra/W	CINH
C0157	♦	♦	24418	5F62	A	7	FIX32	VD	4	Ra	
C0161	♦	♦	24414	5F5E	E	1	FIX32	VD	4	Ra	
C0167	♦	♦	24408	5F58	E	1	FIX32	VD	4	Ra/Wa	
C0168	♦	♦	24407	5F57	A	8	FIX32	VD	4	Ra	
C0169	♦	♦	24406	5F56	A	8	U32	VH	4	Ra	
C0170	♦	♦	24405	5F55	A	8	FIX32	VD	4	Ra	
C0173	♦	♦	24402	5F52	E	1	FIX32	VD	4	Ra/Wa	
C0174		♦	24401	5F51	E	1	FIX32	VD	4	Ra/Wa	
C0178	♦	♦	24397	5F4D	E	1	U32	VH	4	Ra	
C0179	♦	♦	24396	5F4C	E	1	U32	VH	4	Ra	
C0182	♦	♦	24393	5F49	E	1	FIX32	VD	4	Ra/Wa	
C0183	♦	♦	24392	5F48	E	1	FIX32	VD	4	Ra	
C0190	♦	♦	24385	5F41	E	1	FIX32	VD	4	Ra/Wa	
C0195	♦	♦	24380	5F3C	E	1	FIX32	VD	4	Ra/Wa	
C0196	♦	♦	24379	5F3B	E	1	FIX32	VD	4	Ra/Wa	
C0200	♦	♦	24375	5F37	E	1	VS	VS	14	Ra	
C0201	♦	♦	24374	5F36	E	1	VS	VS	20	Ra	
C0202	♦	♦	24373	5F35	E	1	VS	VS	20	Ra	
C0203	♦	♦	24372	5F34	E	1	VS	VS	20	Ra	
C0204	♦	♦	24371	5F33	E	1	VS	VS	20	Ra	
C0206	♦	♦	24369	5F31	E	1	VS	VS	20	Ra	

Code	Controller		Index		Data					Access	
	EVF9321 ... EVF9333	EVF9335 ... EVF9383	dec	hex	DS	DA	DT	Format	DL	LCM-R/W	Condition
C0207	•	•	24368	5F30	E	1	VS	VS	20	Ra	
C0208	•	•	24367	5F2F	E	1	VS	VS	20	Ra	
C0209	•	•	24366	5F2E	E	1	VS	VS	20	Ra	
C0220	•	•	24355	5F23	E	1	FIX32	VD	4	Ra/Wa	
C0221	•	•	24354	5F22	E	1	FIX32	VD	4	Ra/Wa	
C0222	•	•	24353	5F21	E	1	FIX32	VD	4	Ra/Wa	
C0223	•	•	24352	5F20	E	1	FIX32	VD	4	Ra/Wa	
C0224	•	•	24351	5F1F	E	1	FIX32	VD	4	Ra/Wa	
C0234	•	•	24341	5F15	E	1	FIX32	VD	4	Ra/Wa	
C0235	•	•	24340	5F14	E	1	FIX32	VD	4	Ra/Wa	
C0236	•	•	24339	5F13	E	1	FIX32	VD	4	Ra/Wa	
C0241	•	•	24334	5F0E	E	1	FIX32	VD	4	Ra/Wa	
C0244	•	•	24331	5F0B	E	1	FIX32	VD	4	Ra/Wa	
C0250	•	•	24325	5F05	E	1	FIX32	VD	4	Ra/Wa	
C0252	•	•	24323	5F03	E	1	I32	VH	4	Ra/Wa	
C0253	•	•	24322	5F02	E	1	FIX32	VD	4	Ra/Wa	
C0260	•	•	24315	5EFB	E	1	FIX32	VD	4	Ra/Wa	
C0261	•	•	24314	5EFA	E	1	FIX32	VD	4	Ra/Wa	
C0262	•	•	24313	5EF9	E	1	FIX32	VD	4	Ra/Wa	
C0263	•	•	24312	5EF8	E	1	FIX32	VD	4	Ra/Wa	
C0264	•	•	24311	5EF7	E	1	FIX32	VD	4	Ra/Wa	
C0265	•	•	24310	5EF6	E	1	FIX32	VD	4	Ra/Wa	
C0267	•	•	24308	5EF4	A	2	FIX32	VD	4	Ra/W	CINH
C0268	•	•	24307	5EF3	E	1	FIX32	VD	4	Ra/W	CINH
C0269	•	•	24306	5EF2	A	3	FIX32	VD	4	Ra	
C0325	•	•	24250	5EBA	E	1	FIX32	VD	4	Ra/Wa	
C0326	•	•	24249	5EB9	E	1	FIX32	VD	4	Ra/Wa	
C0327	•	•	24248	5EB8	E	1	FIX32	VD	4	Ra/Wa	
C0328	•	•	24247	5EB7	E	1	FIX32	VD	4	Ra/Wa	
C0329	•	•	24246	5EB6	E	1	FIX32	VD	4	Ra/Wa	
C0332	•	•	24243	5EB3	E	1	FIX32	VD	4	Ra/Wa	
C0333	•	•	24242	5EB2	E	1	FIX32	VD	4	Ra/Wa	
C0336	•	•	24239	5EAF	E	1	FIX32	VD	4	Ra	
C0337	•	•	24238	5EAE	E	1	FIX32	VD	4	Ra/Wa	
C0338	•	•	24237	5EAD	E	1	FIX32	VD	4	Ra/Wa	
C0339	•	•	24236	5EAC	A	2	FIX32	VD	4	Ra/W	CINH
C0340	•	•	24235	5EAB	A	2	FIX32	VD	4	Ra	
C0350	•	•	24225	5EA1	E	1	FIX32	VD	4	Ra/Wa	
C0351	•	•	24224	5EA0	E	1	FIX32	VD	4	Ra/Wa	
C0352	•	•	24223	5E9F	E	1	FIX32	VD	4	Ra/Wa	
C0353	•	•	24222	5E9E	A	3	FIX32	VD	4	Ra/Wa	
C0354	•	•	24221	5E9D	A	6	FIX32	VD	4	Ra/Wa	
C0355	•	•	24220	5E9C	A	6	FIX32	VD	4	Ra	
C0356	•	•	24219	5E9B	A	4	FIX32	VD	4	Ra/Wa	
C0357	•	•	24218	5E9A	A	3	FIX32	VD	4	Ra/Wa	

Code	Controller		Index		Data					Access	
	EVF9321 ... EVF9333	EVF9335 ... EVF9383	dec	hex	DS	DA	DT	Format	DL	LCM-R/W	Condition
C0358	•	•	24217	5E99	E	1	FIX32	VD	4	Ra/Wa	
C0359	•	•	24216	5E98	E	1	FIX32	VD	4	Ra	
C0360	•	•	24215	5E97	A	12	FIX32	VD	4	Ra	
C0361	•	•	24214	5E96	A	12	FIX32	VD	4	Ra	
C0364	•	•	24211	5E93	E	1	FIX32	VD	4	Ra/W	CINH
C0365	•	•	24210	5E92	E	1	FIX32	VD	4	Ra	
C0366	•	•	24209	5E91	E	1	FIX32	VD	4	Ra/Wa	
C0367	•	•	24208	5E90	E	1	FIX32	VD	4	Ra/Wa	
C0368	•	•	24207	5E8F	E	1	FIX32	VD	4	Ra/Wa	
C0369	•	•	24206	5E8E	E	1	FIX32	VD	4	Ra/Wa	
C0400	•	•	24175	5E6F	E	1	FIX32	VD	4	Ra	
C0402	•	•	24173	5E6D	E	1	FIX32	VD	4	Ra/W	CINH
C0403	•	•	24172	5E6C	E	1	FIX32	VD	4	Ra/W	CINH
C0404	•	•	24171	5E6B	A	2	FIX32	VD	4	Ra	
C0405	•	•	24170	5E6A	E	1	FIX32	VD	4	Ra	
C0407	•	•	24168	5E68	E	1	FIX32	VD	4	Ra/W	CINH
C0408	•	•	24167	5E67	E	1	FIX32	VD	4	Ra/W	CINH
C0409	•	•	24166	5E66	A	2	FIX32	VD	4	Ra	
C0420	•	•	24155	5E5B	E	1	FIX32	VD	4	Ra/W	CINH
C0421	•	•	24154	5E5A	E	1	FIX32	VD	4	Ra/W	CINH
C0425	•	•	24150	5E56	E	1	FIX32	VD	4	Ra/Wa	
C0426	•	•	24149	5E55	E	1	FIX32	VD	4	Ra	
C0427	•	•	24148	5E54	E	1	FIX32	VD	4	Ra/Wa	
C0429	•	•	24146	5E52	E	1	FIX32	VD	4	Ra/Wa	
C0431	•	•	24144	5E50	E	1	FIX32	VD	4	Ra/W	CINH
C0432	•	•	24143	5E4F	E	1	FIX32	VD	4	Ra/W	CINH
C0433	•	•	24142	5E4E	E	1	FIX32	VD	4	Ra/W	CINH
C0434	•	•	24141	5E4D	A	3	FIX32	VD	4	Ra	
C0436	•	•	24139	5E4B	E	1	FIX32	VD	4	Ra/W	CINH
C0437	•	•	24138	5E4A	E	1	FIX32	VD	4	Ra/W	CINH
C0438	•	•	24137	5E49	E	1	FIX32	VD	4	Ra/W	CINH
C0439	•	•	24136	5E48	A	3	FIX32	VD	4	Ra	
C0443	•	•	24132	5E44	E	1	B8	VH	1	Ra	
C0444	•	•	24131	5E43	A	4	FIX32	VD	4	Ra	
C0450	•	•	24125	5E3D	E	1	FIX32	VD	4	Ra/W	CINH
C0451	•	•	24124	5E3C	E	1	FIX32	VD	4	Ra/W	CINH
C0452	•	•	24123	5E3B	E	1	FIX32	VD	4	Ra/W	CINH
C0458	•	•	24117	5E35	A	2	FIX32	VD	4	Ra	
C0459	•	•	24116	5E34	E	1	FIX32	VD	4	Ra	
C0464	•	•	24111	5E2F	E	1	FIX32	VD	4	Ra	
C0465	•	•	24110	5E2E	A	50	FIX32	VD	4	Ra/W	CINH
C0466	•	•	24109	5E2D	E	1	FIX32	VD	4	Ra	
C0469	•	•	24106	5E2A	E	1	FIX32	VD	4	Ra/W	CINH
C0470	•	•	24105	5E29	A	4	B8	VH	1	Ra/Wa	
C0471	•	•	24104	5E28	E	1	B32	VH	4	Ra/Wa	

Code	Controller		Index		Data					Access	
	EVF9321 ... EVF9333	EVF9335 ... EVF9383	dec	hex	DS	DA	DT	Format	DL	LCM-R/W	Condition
C0472	•	•	24103	5E27	A	20	FIX32	VD	4	Ra/Wa	
C0473	•	•	24102	5E26	A	10	FIX32	VD	4	Ra/Wa	
C0474	•	•	24101	5E25	A	2	I32	VH	4	Ra/Wa	
C0475	•	•	24100	5E24	A	2	FIX32	VD	4	Ra/Wa	
C0497	•	•	24078	5E0E	E	1	FIX32	VD	4	Ra/Wa	
C0510	•	•	24065	5E01	E	1	FIX32	VD	4	Ra/W	CINH
C0511	•	•	24064	5E00	E	1	FIX32	VD	4	Ra/Wa	
C0517	•	•	24058	5DFA	A	32	FIX32	VD	4	Ra/Wa	
C0520	•	•	24055	5DF7	E	1	FIX32	VD	4	Ra/W	CINH
C0521	•	•	24054	5DF6	E	1	FIX32	VD	4	Ra/W	CINH
C0522	•	•	24053	5DF5	E	1	FIX32	VD	4	Ra/W	CINH
C0523	•	•	24052	5DF4	E	1	FIX32	VD	4	Ra/W	CINH
C0524	•	•	24051	5DF3	E	1	FIX32	VD	4	Ra/W	CINH
C0525	•	•	24050	5DF2	E	1	FIX32	VD	4	Ra/W	CINH
C0526	•	•	24049	5DF1	E	1	FIX32	VD	4	Ra/W	CINH
C0527	•	•	24048	5DF0	E	1	FIX32	VD	4	Ra/W	CINH
C0528	•	•	24047	5DEF	A	2	I32	VH	4	Ra	
C0529	•	•	24046	5DEE	E	1	FIX32	VD	4	Ra/Wa	
C0530	•	•	24045	5DED	E	1	FIX32	VD	4	Ra/Wa	
C0531	•	•	24044	5DEC	E	1	FIX32	VD	4	Ra/Wa	
C0532	•	•	24043	5DEB	E	1	FIX32	VD	4	Ra/Wa	
C0533	•	•	24042	5DEA	E	1	FIX32	VD	4	Ra/Wa	
C0534	•	•	24041	5DE9	E	1	FIX32	VD	4	Ra/Wa	
C0535	•	•	24040	5DE8	E	1	FIX32	VD	4	Ra/Wa	
C0536	•	•	24039	5DE7	A	3	FIX32	VD	4	Ra	
C0537	•	•	24038	5DE6	E	1	FIX32	VD	4	Ra	
C0538	•	•	24037	5DE5	A	3	FIX32	VD	4	Ra	
C0539	•	•	24036	5DE4	E	1	FIX32	VD	4	Ra	
C0540	•	•	24035	5DE3	E	1	FIX32	VD	4	Ra/W	CINH
C0541	•	•	24034	5DE2	E	1	FIX32	VD	4	Ra/W	CINH
C0542	•	•	24033	5DE1	E	1	FIX32	VD	4	Ra/W	CINH
C0544	•	•	24031	5DDF	E	1	FIX32	VD	4	Ra/W	CINH
C0545	•	•	24030	5DDE	E	1	FIX32	VD	4	Ra/Wa	
C0546	•	•	24029	5DDD	E	1	U32	VH	4	Ra/Wa	
C0547	•	•	24028	5DDC	E	1	FIX32	VD	4	Ra	
C0548	•	•	24027	5DDB	E	1	FIX32	VD	4	Ra	
C0549	•	•	24026	5DDA	E	1	FIX32	VD	4	Ra	
C0560	•	•	24015	5DCF	A	15	FIX32	VD	4	Ra/Wa	
C0561	•	•	24014	5DCE	E	1	FIX32	VD	4	Ra/W	CINH
C0562	•	•	24013	5DCD	A	4	FIX32	VD	4	Ra/W	CINH
C0563	•	•	24012	5DCC	E	1	FIX32	VD	4	Ra	
C0564	•	•	24011	5DCB	A	4	FIX32	VD	4	Ra	
C0570	•	•	24005	5DC5	E	1	FIX32	VD	4	Ra/W	CINH
C0571	•	•	24004	5DC4	E	1	FIX32	VD	4	Ra/W	CINH
C0572	•	•	24003	5DC3	E	1	FIX32	VD	4	Ra	

Code	Controller		Index		Data					Access	
	EVF9321 ... EVF9333	EVF9335 ... EVF9383	dec	hex	DS	DA	DT	Format	DL	LCM-R/W	Condition
C0573	♦	♦	24002	5DC2	E	1	FIX32	VD	4	Ra	
C0574	♦		24001	5DC1	E	1	FIX32	VD	4	Ra/Wa	
C0581	♦	♦	23994	5DBA	E	1	FIX32	VD	4	Ra/Wa	
C0582	♦	♦	23993	5DB9	E	1	FIX32	VD	4	Ra/Wa	
C0583	♦	♦	23992	5DB8	E	1	FIX32	VD	4	Ra/Wa	
C0584	♦	♦	23991	5DB7	E	1	FIX32	VD	4	Ra/Wa	
C0585	♦	♦	23990	5DB6	E	1	FIX32	VD	4	Ra/Wa	
C0587	♦	♦	23988	5DB4	E	1	FIX32	VD	4	Ra/Wa	
C0588	♦	♦	23987	5DB3	E	1	FIX32	VD	4	Ra/Wa	
C0591	♦	♦	23984	5DB0	E	1	FIX32	VD	4	Ra/Wa	
C0592	♦	♦	23983	5DAF	E	1	FIX32	VD	4	Ra/Wa	
C0593	♦	♦	23982	5DAE	E	1	FIX32	VD	4	Ra/Wa	
C0594	♦	♦	23981	5DAD	E	1	FIX32	VD	4	Ra/Wa	
C0595	♦	♦	23980	5DAC	E	1	FIX32	VD	4	Ra/Wa	
C0596	♦	♦	23979	5DAB	E	1	FIX32	VD	4	Ra/Wa	
C0597	♦	♦	23978	5DAA	E	1	FIX32	VD	4	Ra/Wa	
C0598	♦	♦	23977	5DA9	E	1	FIX32	VD	4	Ra/Wa	
C0599	♦	♦	23976	5DA8	E	1	FIX32	VD	4	Ra/Wa	
C0600	♦	♦	23975	5DA7	E	1	FIX32	VD	4	Ra/Wa	
C0601	♦	♦	23974	5DA6	A	2	FIX32	VD	4	Ra/W	CINH
C0602	♦	♦	23973	5DA5	A	2	FIX32	VD	4	Ra	
C0603	♦	♦	23972	5DA4	E	1	FIX32	VD	4	Ra/Wa	
C0604	♦	♦	23971	5DA3	A	2	FIX32	VD	4	Ra/W	CINH
C0605	♦	♦	23970	5DA2	A	2	FIX32	VD	4	Ra	
C0606	♦	♦	23969	5DA1	E	1	FIX32	VD	4	Ra/Wa	
C0608	♦	♦	23967	5D9F	E	1	FIX32	VD	4	Ra/W	CINH
C0609	♦	♦	23966	5D9E	E	1	FIX32	VD	4	Ra	
C0610	♦	♦	23965	5D9D	A	3	FIX32	VD	4	Ra/W	CINH
C0611	♦	♦	23964	5D9C	A	3	FIX32	VD	4	Ra	
C0612	♦	♦	23963	5D9B	A	3	FIX32	VD	4	Ra/W	CINH
C0613	♦	♦	23962	5D9A	A	3	FIX32	VD	4	Ra	
C0620	♦	♦	23955	5D93	E	1	FIX32	VD	4	Ra/Wa	
C0621	♦	♦	23954	5D92	E	1	FIX32	VD	4	Ra/Wa	
C0622	♦	♦	23953	5D91	E	1	FIX32	VD	4	Ra/W	CINH
C0623	♦	♦	23952	5D90	E	1	FIX32	VD	4	Ra	
C0630	♦	♦	23945	5D89	E	1	FIX32	VD	4	Ra/Wa	
C0631	♦	♦	23944	5D88	E	1	FIX32	VD	4	Ra/Wa	
C0632	♦	♦	23943	5D87	E	1	FIX32	VD	4	Ra/W	CINH
C0633	♦	♦	23942	5D86	E	1	FIX32	VD	4	Ra	
C0640	♦	♦	23935	5D7F	E	1	FIX32	VD	4	Ra/Wa	
C0641	♦	♦	23934	5D7E	E	1	FIX32	VD	4	Ra/W	CINH
C0642	♦	♦	23933	5D7D	E	1	FIX32	VD	4	Ra	
C0643	♦	♦	23932	5D7C	E	1	FIX32	VD	4	Ra/Wa	
C0644	♦	♦	23931	5D7B	E	1	FIX32	VD	4	Ra/W	CINH
C0645	♦	♦	23930	5D7A	E	1	FIX32	VD	4	Ra	

Code	Controller		Index		Data					Access	
	EVF9321 ... EVF9333	EVF9335 ... EVF9383	dec	hex	DS	DA	DT	Format	DL	LCM-R/W	Condition
C0650	•	•	23925	5D75	E	1	FIX32	VD	4	Ra/Wa	
C0651	•	•	23924	5D74	E	1	FIX32	VD	4	Ra/Wa	
C0652	•	•	23923	5D73	E	1	FIX32	VD	4	Ra/W	CINH
C0653	•	•	23922	5D72	E	1	FIX32	VD	4	Ra/Wa	
C0654	•	•	23921	5D71	E	1	FIX32	VD	4	Ra	
C0655	•	•	23920	5D70	E	1	FIX32	VD	4	Ra/Wa	
C0656	•	•	23919	5D6F	E	1	FIX32	VD	4	Ra/Wa	
C0657	•	•	23918	5D6E	E	1	FIX32	VD	4	Ra/W	CINH
C0658	•	•	23917	5D6D	E	1	FIX32	VD	4	Ra	
C0661	•	•	23914	5D6A	E	1	FIX32	VD	4	Ra/W	CINH
C0662	•	•	23913	5D69	E	1	FIX32	VD	4	Ra	
C0671	•	•	23904	5D60	E	1	FIX32	VD	4	Ra/Wa	
C0672	•	•	23903	5D5F	E	1	FIX32	VD	4	Ra/Wa	
C0673	•	•	23902	5D5E	E	1	FIX32	VD	4	Ra/W	CINH
C0674	•	•	23901	5D5D	E	1	FIX32	VD	4	Ra/W	CINH
C0675	•	•	23900	5D5C	E	1	FIX32	VD	4	Ra/W	CINH
C0676	•	•	23899	5D5B	A	2	FIX32	VD	4	Ra	
C0677	•	•	23898	5D5A	E	1	FIX32	VD	4	Ra	
C0680	•	•	23895	5D57	E	1	FIX32	VD	4	Ra/Wa	
C0681	•	•	23894	5D56	E	1	FIX32	VD	4	Ra/Wa	
C0682	•	•	23893	5D55	E	1	FIX32	VD	4	Ra/Wa	
C0683	•	•	23892	5D54	A	2	FIX32	VD	4	Ra/W	CINH
C0684	•	•	23891	5D53	A	2	FIX32	VD	4	Ra	
C0685	•	•	23890	5D52	E	1	FIX32	VD	4	Ra/Wa	
C0686	•	•	23889	5D51	E	1	FIX32	VD	4	Ra/Wa	
C0687	•	•	23888	5D50	E	1	FIX32	VD	4	Ra/Wa	
C0688	•	•	23887	5D4F	A	2	FIX32	VD	4	Ra/W	CINH
C0689	•	•	23886	5D4E	A	2	FIX32	VD	4	Ra	
C0690	•	•	23885	5D4D	E	1	FIX32	VD	4	Ra/Wa	
C0691	•	•	23884	5D4C	E	1	FIX32	VD	4	Ra/Wa	
C0692	•	•	23883	5D4B	E	1	FIX32	VD	4	Ra/Wa	
C0693	•	•	23882	5D4A	A	2	FIX32	VD	4	Ra/W	CINH
C0694	•	•	23881	5D49	A	2	FIX32	VD	4	Ra	
C0700	•	•	23875	5D43	E	1	FIX32	VD	4	Ra/W	CINH
C0701	•	•	23874	5D42	E	1	FIX32	VD	4	Ra	
C0703	•	•	23872	5D40	E	1	FIX32	VD	4	Ra/W	CINH
C0704	•	•	23871	5D3F	E	1	FIX32	VD	4	Ra	
C0705	•	•	23870	5D3E	E	1	FIX32	VD	4	Ra/Wa	
C0706	•	•	23869	5D3D	E	1	FIX32	VD	4	Ra/Wa	
C0707	•	•	23868	5D3C	E	1	FIX32	VD	4	Ra/Wa	
C0708	•	•	23867	5D3B	A	2	FIX32	VD	4	Ra/W	CINH
C0709	•	•	23866	5D3A	A	2	FIX32	VD	4	Ra	
C0710	•	•	23865	5D39	E	1	FIX32	VD	4	Ra/Wa	
C0711	•	•	23864	5D38	E	1	FIX32	VD	4	Ra/Wa	
C0713	•	•	23862	5D36	E	1	FIX32	VD	4	Ra/W	CINH

Code	Controller		Index		Data					Access	
	EVF9321 ... EVF9333	EVF9335 ... EVF9383	dec	hex	DS	DA	DT	Format	DL	LCM-R/W	Condition
C0714	•	•	23861	5D35	E	1	FIX32	VD	4	Ra	
C0715	•	•	23860	5D34	E	1	FIX32	VD	4	Ra/Wa	
C0716	•	•	23859	5D33	E	1	FIX32	VD	4	Ra/Wa	
C0718	•	•	23857	5D31	E	1	FIX32	VD	4	Ra/W	CINH
C0719	•	•	23856	5D30	E	1	FIX32	VD	4	Ra	
C0720	•	•	23855	5D2F	E	1	FIX32	VD	4	Ra/Wa	
C0721	•	•	23854	5D2E	E	1	FIX32	VD	4	Ra/Wa	
C0723	•	•	23852	5D2C	E	1	FIX32	VD	4	Ra/W	CINH
C0724	•	•	23851	5D2B	E	1	FIX32	VD	4	Ra	
C0725	•	•	23850	5D2A	E	1	FIX32	VD	4	Ra/Wa	
C0726	•	•	23849	5D29	E	1	FIX32	VD	4	Ra/Wa	
C0728	•	•	23847	5D27	E	1	FIX32	VD	4	Ra/W	CINH
C0729	•	•	23846	5D26	E	1	FIX32	VD	4	Ra	
C0730	•	•	23845	5D25	E	1	FIX32	VD	4	Ra/Wa	
C0731	•	•	23844	5D24	E	1	FIX32	VD	4	Ra	
C0732	•	•	23843	5D23	A	4	FIX32	VD	4	Ra/W	CINH
C0733	•	•	23842	5D22	E	1	FIX32	VD	4	Ra/W	CINH
C0734	•	•	23841	5D21	E	1	FIX32	VD	4	Ra/Wa	
C0735	•	•	23840	5D20	E	1	FIX32	VD	4	Ra/Wa	
C0736	•	•	23839	5D1F	E	1	FIX32	VD	4	Ra/Wa	
C0737	•	•	23838	5D1E	E	1	FIX32	VD	4	Ra/Wa	
C0738	•	•	23837	5D1D	E	1	FIX32	VD	4	Ra/Wa	
C0739	•	•	23836	5D1C	E	1	FIX32	VD	4	Ra/Wa	
C0740	•	•	23835	5D1B	A	2	FIX32	VD	4	Ra/Wa	
C0741	•	•	23834	5D1A	A	4	FIX32	VD	4	Ra	
C0742	•	•	23833	5D19	E	1	FIX32	VD	4	Ra	
C0743	•	•	23832	5D18	E	1	FIX32	VD	4	Ra	
C0744	•	•	23831	5D17	E	1	FIX32	VD	4	Ra/Wa	
C0749	•	•	23826	5D12	A	3	FIX32	VD	4	Ra	
C0750	•	•	23825	5D11	E	1	FIX32	VD	4	Ra/Wa	
C0751	•	•	23824	5D10	E	1	FIX32	VD	4	Ra/Wa	
C0752	•	•	23823	5D0F	E	1	FIX32	VD	4	Ra/Wa	
C0753	•	•	23822	5D0E	E	1	FIX32	VD	4	Ra/Wa	
C0754	•	•	23821	5D0D	E	1	U32	VH	4	Ra/Wa	
C0755	•	•	23820	5D0C	E	1	FIX32	VD	4	Ra/Wa	
C0756	•	•	23819	5D0B	E	1	I32	VH	4	Ra/Wa	
C0757	•	•	23818	5D0A	E	1	FIX32	VD	4	Ra/Wa	
C0758	•	•	23817	5D09	E	1	FIX32	VD	4	Ra/W	CINH
C0759	•	•	23816	5D08	E	1	FIX32	VD	4	Ra/W	CINH
C0760	•	•	23815	5D07	E	1	FIX32	VD	4	Ra/W	CINH
C0761	•	•	23814	5D06	E	1	FIX32	VD	4	Ra/W	CINH
C0764	•	•	23811	5D03	A	3	FIX32	VD	4	Ra	
C0765	•	•	23810	5D02	E	1	FIX32	VD	4	Ra	
C0770	•	•	23805	5CFD	E	1	FIX32	VD	4	Ra/W	CINH
C0771	•	•	23804	5CFC	E	1	FIX32	VD	4	Ra/W	CINH

Code	Controller		Index		Data					Access	
	EVF9321 ... EVF9333	EVF9335 ... EVF9383	dec	hex	DS	DA	DT	Format	DL	LCM-R/W	Condition
C0772	•	•	23803	5CFB	E	1	FIX32	VD	4	Ra/W	CINH
C0773	•	•	23802	5CFA	A	3	FIX32	VD	4	Ra	
C0775	•	•	23800	5CF8	E	1	FIX32	VD	4	Ra/W	CINH
C0776	•	•	23799	5CF7	E	1	FIX32	VD	4	Ra/W	CINH
C0777	•	•	23798	5CF6	E	1	FIX32	VD	4	Ra/W	CINH
C0778	•	•	23797	5CF5	A	3	FIX32	VD	4	Ra	
C0780	•	•	23795	5CF3	E	1	FIX32	VD	4	Ra/W	CINH
C0781	•	•	23794	5CF2	E	1	FIX32	VD	4	Ra/W	CINH
C0782	•	•	23793	5CF1	E	1	FIX32	VD	4	Ra/W	CINH
C0783	•	•	23792	5CF0	E	1	FIX32	VD	4	Ra/W	CINH
C0784	•	•	23791	5CEF	E	1	FIX32	VD	4	Ra/W	CINH
C0785	•	•	23790	5CEE	E	1	FIX32	VD	4	Ra/W	CINH
C0786	•	•	23789	5CED	E	1	FIX32	VD	4	Ra/W	CINH
C0787	•	•	23788	5CEC	A	4	FIX32	VD	4	Ra/W	CINH
C0788	•	•	23787	5CEB	A	4	FIX32	VD	4	Ra/W	CINH
C0789	•	•	23786	5CEA	E	1	FIX32	VD	4	Ra/W	CINH
C0790	•	•	23785	5CE9	E	1	FIX32	VD	4	Ra/W	CINH
C0798	•	•	23777	5CE1	A	2	FIX32	VD	4	Ra	
C0799	•	•	23776	5CE0	A	13	FIX32	VD	4	Ra	
C0800	•	•	23775	5CDF	E	1	FIX32	VD	4	Ra/W	CINH
C0801	•	•	23774	5CDE	E	1	FIX32	VD	4	Ra/W	CINH
C0802	•	•	23773	5CDD	E	1	FIX32	VD	4	Ra/W	CINH
C0803	•	•	23772	5CDC	E	1	FIX32	VD	4	Ra/W	CINH
C0804	•	•	23771	5CDB	E	1	FIX32	VD	4	Ra/W	CINH
C0805	•	•	23770	5CDA	E	1	FIX32	VD	4	Ra/W	CINH
C0808	•	•	23767	5CD7	A	4	FIX32	VD	4	Ra	
C0809	•	•	23766	5CD6	A	2	FIX32	VD	4	Ra	
C0810	•	•	23765	5CD5	A	2	FIX32	VD	4	Ra/W	CINH
C0811	•	•	23764	5CD4	E	1	FIX32	VD	4	Ra/W	CINH
C0812	•	•	23763	5CD3	A	2	FIX32	VD	4	Ra	
C0813	•	•	23762	5CD2	E	1	FIX32	VD	4	Ra	
C0815	•	•	23760	5CD0	A	2	FIX32	VD	4	Ra/W	CINH
C0816	•	•	23759	5CCF	E	1	FIX32	VD	4	Ra/W	CINH
C0817	•	•	23758	5CCE	A	2	FIX32	VD	4	Ra	
C0818	•	•	23757	5CCD	E	1	FIX32	VD	4	Ra	
C0820	•	•	23755	5CCB	A	3	FIX32	VD	4	Ra/W	CINH
C0821	•	•	23754	5CCA	A	3	FIX32	VD	4	Ra	
C0822	•	•	23753	5CC9	A	3	FIX32	VD	4	Ra/W	CINH
C0823	•	•	23752	5CC8	A	3	FIX32	VD	4	Ra	
C0824	•	•	23751	5CC7	A	3	FIX32	VD	4	Ra/W	CINH
C0825	•	•	23750	5CC6	A	3	FIX32	VD	4	Ra	
C0826	•	•	23749	5CC5	A	3	FIX32	VD	4	Ra/W	CINH
C0827	•	•	23748	5CC4	A	3	FIX32	VD	4	Ra	
C0828	•	•	23747	5CC3	A	3	FIX32	VD	4	Ra/W	CINH
C0829	•	•	23746	5CC2	A	3	FIX32	VD	4	Ra	

Code	Controller		Index		Data					Access	
	EVF9321 ... EVF9333	EVF9335 ... EVF9383	dec	hex	DS	DA	DT	Format	DL	LCM-R/W	Condition
C0830	•	•	23745	5CC1	A	3	FIX32	VD	4	Ra/W	CINH
C0831	•	•	23744	5CC0	A	3	FIX32	VD	4	Ra	
C0832	•	•	23743	5CBF	A	3	FIX32	VD	4	Ra/W	CINH
C0833	•	•	23742	5CBE	A	3	FIX32	VD	4	Ra	
C0834	•	•	23741	5CBD	A	3	FIX32	VD	4	Ra/W	CINH
C0835	•	•	23740	5CBC	A	3	FIX32	VD	4	Ra	
C0836	•	•	23739	5CBB	A	3	FIX32	VD	4	Ra/W	CINH
C0837	•	•	23738	5CBA	A	3	FIX32	VD	4	Ra	
C0838	•	•	23737	5CB9	A	3	FIX32	VD	4	Ra/W	CINH
C0839	•	•	23736	5CB8	A	3	FIX32	VD	4	Ra	
C0840	•	•	23735	5CB7	E	1	FIX32	VD	4	Ra/W	CINH
C0841	•	•	23734	5CB6	E	1	FIX32	VD	4	Ra	
C0842	•	•	23733	5CB5	E	1	FIX32	VD	4	Ra/W	CINH
C0843	•	•	23732	5CB4	E	1	FIX32	VD	4	Ra	
C0844	•	•	23731	5CB3	E	1	FIX32	VD	4	Ra/W	CINH
C0845	•	•	23730	5CB2	E	1	FIX32	VD	4	Ra	
C0846	•	•	23729	5CB1	E	1	FIX32	VD	4	Ra/W	CINH
C0847	•	•	23728	5CB0	E	1	FIX32	VD	4	Ra	
C0848	•	•	23727	5CAF	E	1	FIX32	VD	4	Ra/W	CINH
C0849	•	•	23726	5CAE	E	1	FIX32	VD	4	Ra	
C0850	•	•	23725	5CAD	A	3	FIX32	VD	4	Ra/W	CINH
C0851	•	•	23724	5CAC	E	1	FIX32	VD	4	Ra/W	CINH
C0852	•	•	23723	5CAB	E	1	FIX32	VD	4	Ra/Wa	
C0853	•	•	23722	5CAA	E	1	FIX32	VD	4	Ra/Wa	
C0855	•	•	23720	5CA8	A	2	B16	VH	2	Ra	
C0856	•	•	23719	5CA7	A	3	I32	VH	4	Ra	
C0857	•	•	23718	5CA6	E	1	I32	VH	4	Ra	
C0858	•	•	23717	5CA5	A	3	I32	VH	4	Ra	
C0859	•	•	23716	5CA4	E	1	I32	VH	4	Ra	
C0860	•	•	23715	5CA3	A	11	FIX32	VD	4	Ra/W	CINH
C0861	•	•	23714	5CA2	A	3	FIX32	VD	4	Ra/W	CINH
C0863	•	•	23712	5CA0	A	6	B32	VH	4	Ra	
C0864	•	•	23711	5C9F	A	3	FIX32	VD	4	Ra/Wa	
C0865	•	•	23710	5C9E	A	3	FIX32	VD	4	Ra/Wa	
C0866	•	•	23709	5C9D	A	11	I32	VH	4	Ra	
C0867	•	•	23708	5C9C	A	3	I32	VH	4	Ra	
C0868	•	•	23707	5C9B	A	11	I32	VH	4	Ra	
C0869	•	•	23706	5C9A	A	3	I32	VH	4	Ra	
C0870	•	•	23705	5C99	A	2	FIX32	VD	4	Ra/W	CINH
C0871	•	•	23704	5C98	E	1	FIX32	VD	4	Ra/W	CINH
C0876	•	•	23699	5C93	E	1	FIX32	VD	4	Ra/W	CINH
C0878	•	•	23697	5C91	A	4	FIX32	VD	4	Ra	
C0879	•	•	23696	5C90	A	3	FIX32	VD	4	Ra/Wa	
C0880	•	•	23695	5C8F	A	2	FIX32	VD	4	Ra/W	CINH
C0881	•	•	23694	5C8E	E	1	FIX32	VD	4	Ra/W	CINH

Code	Controller		Index		Data					Access	
	EVF9321 ... EVF9333	EVF9335 ... EVF9383	dec	hex	DS	DA	DT	Format	DL	LCM-R/W	Condition
C0884	♦	♦	23691	5C8B	A	3	FIX32	VD	4	Ra	
C0885	♦	♦	23690	5C8A	E	1	FIX32	VD	4	Ra/W	CINH
C0886	♦	♦	23689	5C89	E	1	FIX32	VD	4	Ra/W	CINH
C0889	♦	♦	23686	5C86	A	2	FIX32	VD	4	Ra	
C0890	♦	♦	23685	5C85	E	1	FIX32	VD	4	Ra/W	CINH
C0891	♦	♦	23684	5C84	E	1	FIX32	VD	4	Ra/W	CINH
C0892	♦	♦	23683	5C83	E	1	FIX32	VD	4	Ra/W	CINH
C0893	♦	♦	23682	5C82	E	1	FIX32	VD	4	Ra/W	CINH
C0899	♦	♦	23676	5C7C	E	1	FIX32	VD	4	Ra/W	CINH
C0900	♦	♦	23675	5C7B	E	1	FIX32	VD	4	Ra/W	CINH
C0901	♦	♦	23674	5C7A	E	1	FIX32	VD	4	Ra/W	CINH
C0902	♦	♦	23673	5C79	E	1	FIX32	VD	4	Ra/W	CINH
C0903	♦	♦	23672	5C78	E	1	FIX32	VD	4	Ra/W	CINH
C0904	♦	♦	23671	5C77	E	1	FIX32	VD	4	Ra/W	CINH
C0905	♦	♦	23670	5C76	E	1	FIX32	VD	4	Ra	
C0906	♦	♦	23669	5C75	A	6	FIX32	VD	4	Ra	
C0907	♦	♦	23668	5C74	A	4	FIX32	VD	4	Ra	
C0909	♦	♦	23666	5C72	E	1	FIX32	VD	4	Ra/Wa	
C0910	♦	♦	23665	5C71	E	1	FIX32	VD	4	Ra/W	CINH
C0911	♦	♦	23664	5C70	E	1	FIX32	VD	4	Ra	
C0912	♦	♦	23663	5C6F	E	1	FIX32	VD	4	Ra	
C0913	♦		23662	5C6E	E	1	FIX32	VD	4	Ra/Wa	
C0940	♦	♦	23635	5C53	E	1	FIX32	VD	4	Ra/Wa	
C0941	♦	♦	23634	5C52	E	1	FIX32	VD	4	Ra/Wa	
C0942	♦	♦	23633	5C51	E	1	FIX32	VD	4	Ra/W	CINH
C0943	♦	♦	23632	5C50	E	1	FIX32	VD	4	Ra	
C0945	♦	♦	23630	5C4E	E	1	FIX32	VD	4	Ra/Wa	
C0946	♦	♦	23629	5C4D	E	1	FIX32	VD	4	Ra/Wa	
C0947	♦	♦	23628	5C4C	E	1	FIX32	VD	4	Ra/W	CINH
C0948	♦	♦	23627	5C4B	E	1	FIX32	VD	4	Ra	
C0950	♦	♦	23625	5C49	E	1	FIX32	VD	4	Ra/Wa	
C0951	♦	♦	23624	5C48	E	1	FIX32	VD	4	Ra/Wa	
C0952	♦	♦	23623	5C47	E	1	FIX32	VD	4	Ra/W	CINH
C0953	♦	♦	23622	5C46	E	1	FIX32	VD	4	Ra	
C0955	♦	♦	23620	5C44	E	1	FIX32	VD	4	Ra/Wa	
C0956	♦	♦	23619	5C43	E	1	FIX32	VD	4	Ra/Wa	
C0957	♦	♦	23618	5C42	E	1	FIX32	VD	4	Ra/W	CINH
C0958	♦	♦	23617	5C41	E	1	FIX32	VD	4	Ra	
C0960	♦	♦	23615	5C3F	E	1	FIX32	VD	4	Ra/Wa	
C0961	♦	♦	23614	5C3E	E	1	FIX32	VD	4	Ra/Wa	
C0962	♦	♦	23613	5C3D	E	1	FIX32	VD	4	Ra/Wa	
C0963	♦	♦	23612	5C3C	E	1	FIX32	VD	4	Ra/Wa	
C0964	♦	♦	23611	5C3B	E	1	FIX32	VD	4	Ra/Wa	
C0965	♦	♦	23610	5C3A	E	1	FIX32	VD	4	Ra/Wa	
C0966	♦	♦	23609	5C39	E	1	FIX32	VD	4	Ra/Wa	

Code	Controller		Index		Data					Access	
	EVF9321 ... EVF9333	EVF9335 ... EVF9383	dec	hex	DS	DA	DT	Format	DL	LCM-R/W	Condition
C0967	•	•	23608	5C38	E	1	FIX32	VD	4	Ra/W	CINH
C0968	•	•	23607	5C37	E	1	FIX32	VD	4	Ra	
C0970	•	•	23605	5C35	E	1	FIX32	VD	4	Ra/W	CINH
C0971	•	•	23604	5C34	E	1	FIX32	VD	4	Ra/W	CINH
C0972	•	•	23603	5C33	E	1	FIX32	VD	4	Ra/W	CINH
C0973	•	•	23602	5C32	E	1	FIX32	VD	4	Ra/W	CINH
C0974	•	•	23601	5C31	E	1	FIX32	VD	4	Ra/W	CINH
C0975	•	•	23600	5C30	E	1	FIX32	VD	4	Ra/W	CINH
C0976	•	•	23599	5C2F	E	1	FIX32	VD	4	Ra/W	CINH
C0977	•	•	23598	5C2E	E	1	FIX32	VD	4	Ra/W	CINH
C0978	•	•	23597	5C2D	E	1	FIX32	VD	4	Ra/W	CINH
C0980	•	•	23595	5C2B	E	1	FIX32	VD	4	Ra/Wa	
C0981	•	•	23594	5C2A	E	1	FIX32	VD	4	Ra/Wa	
C0982	•	•	23593	5C29	E	1	FIX32	VD	4	Ra/Wa	
C0983	•	•	23592	5C28	E	1	FIX32	VD	4	Ra/Wa	
C0988	•	•	23587	5C23	A	7	FIX32	VD	4	Ra	
C0989	•	•	23586	5C22	A	2	FIX32	VD	4	Ra	
C1000	•	•	23575	5C17	E	1	FIX32	VD	4	Ra/Wa	
C1001	•	•	23574	5C16	E	1	FIX32	VD	4	Ra/W	CINH
C1002	•	•	23573	5C15	E	1	I32	VH	4	Ra/Wa	
C1040	•	•	23535	5BEF	E	1	FIX32	VD	4	Ra/Wa	
C1041	•	•	23534	5BEE	E	1	FIX32	VD	4	Ra/Wa	
C1042	•	•	23533	5BED	E	1	FIX32	VD	4	Ra/W	CINH
C1043	•	•	23532	5BEC	E	1	FIX32	VD	4	Ra/W	CINH
C1044	•	•	23531	5BEB	E	1	FIX32	VD	4	Ra/W	CINH
C1045	•	•	23530	5BEA	A	2	FIX32	VD	4	Ra	
C1046	•	•	23529	5BE9	E	1	FIX32	VD	4	Ra	
C1090	•	•	23485	5BBD	E	1	I32	VH	4	Ra	
C1091	•	•	23484	5BBC	E	1	FIX32	VD	4	Ra/Wa	
C1092	•	•	23483	5BBB	E	1	FIX32	VD	4	Ra/Wa	
C1093	•	•	23482	5BBA	E	1	FIX32	VD	4	Ra/Wa	
C1094	•	•	23481	5BB9	E	1	FIX32	VD	4	Ra/Wa	
C1095	•	•	23480	5BB8	E	1	FIX32	VD	4	Ra/Wa	
C1096	•	•	23479	5BB7	E	1	FIX32	VD	4	Ra/W	CINH
C1097	•	•	23478	5BB6	E	1	FIX32	VD	4	Ra/W	CINH
C1098	•	•	23477	5BB5	E	1	FIX32	VD	4	Ra	
C1099	•	•	23476	5BB4	E	1	FIX32	VD	4	Ra	
C1100	•	•	23475	5BB3	E	1	FIX32	VD	4	Ra/Wa	
C1101	•	•	23474	5BB2	A	2	FIX32	VD	4	Ra/W	CINH
C1102	•	•	23473	5BB1	A	3	FIX32	VD	4	Ra/W	CINH
C1103	•	•	23472	5BB0	A	2	FIX32	VD	4	Ra	
C1104	•	•	23471	5BAF	A	3	FIX32	VD	4	Ra	
C1160	•	•	23418	5B7A	E	1	FIX32	VD	4	Ra/W	CINH
C1161	•	•	23417	5B79	E	1	FIX32	VD	4	Ra/W	CINH
C1162	•	•	23416	5B78	E	1	FIX32	VD	4	Ra	

Code	Controller		Index		Data					Access	
	EVF9321 ... EVF9333	EVF9335 ... EVF9383	dec	hex	DS	DA	DT	Format	DL	LCM-R/W	Condition
C1163	♦	♦	23415	5B77	E	1	FIX32	VD	4	Ra	
C1190	♦	♦	23388	5B5C	E	1	FIX32	VD	4	Ra/Wa	
C1191	♦	♦	23387	5B5B	A	2	FIX32	VD	4	Ra/Wa	
C1192	♦	♦	23386	5B5A	A	2	FIX32	VD	4	Ra/Wa	
C1300	♦	♦	23278	5AEE	E	1	FIX32	VD	4	Ra/Wa	
C1301	♦	♦	23277	5AED	E	1	FIX32	VD	4	Ra/Wa	
C1302	♦	♦	23276	5AEC	E	1	FIX32	VD	4	Ra/Wa	
C1303	♦	♦	23275	5AEB	E	1	FIX32	VD	4	Ra/Wa	
C1304	♦	♦	23274	5AEA	E	1	VS	VS	20	Ra	
C1305	♦	♦	23273	5AE9	E	1	VS	VS	20	Ra	
C1306	♦	♦	23272	5AE8	E	1	FIX32	VD	4	Ra/Wa	
C1307	♦	♦	23271	5AE7	E	1	FIX32	VD	4	Ra/Wa	
C1308	♦	♦	23270	5AE6	E	1	FIX32	VD	4	Ra/Wa	
C1309	♦	♦	23269	5AE5	E	1	FIX32	VD	4	Ra/Wa	
C1310	♦	♦	23268	5AE4	E	1	FIX32	VD	4	Ra/Wa	
C1311	♦	♦	23267	5AE3	E	1	FIX32	VD	4	Ra/Wa	
C1320	♦	♦	23258	5ADA	E	1	FIX32	VD	4	Ra/W	CINH
C1321	♦	♦	23257	5AD9	A	2	FIX32	VD	4	Ra/W	CINH
C1322	♦	♦	23256	5AD8	A	2	FIX32	VD	4	Ra	
C1325	♦	♦	23253	5AD5	E	1	FIX32	VD	4	Ra	
C1326	♦	♦	23252	5AD4	A	2	FIX32	VD	4	Ra	
C1327	♦	♦	23251	5AD3	A	2	FIX32	VD	4	Ra/W	CINH
C1328	♦	♦	23250	5AD2	E	1	FIX32	VD	4	Ra	
C1330	♦	♦	23248	5AD0	E	1	FIX32	VD	4	Ra/Wa	
C1331	♦	♦	23247	5ACF	E	1	FIX32	VD	4	Ra/Wa	
C1332	♦	♦	23246	5ACE	E	1	FIX32	VD	4	Ra/Wa	
C1333	♦	♦	23245	5ACD	E	1	FIX32	VD	4	Ra/Wa	
C1334	♦	♦	23244	5ACC	E	1	FIX32	VD	4	Ra/Wa	
C1335	♦	♦	23243	5ACB	E	1	FIX32	VD	4	Ra/Wa	
C1336	♦	♦	23242	5ACA	E	1	FIX32	VD	4	Ra/Wa	
C1337	♦	♦	23241	5AC9	E	1	FIX32	VD	4	Ra/Wa	
C1340	♦	♦	23238	5AC6	A	4	FIX32	VD	4	Ra/W	CINH
C1341	♦	♦	23237	5AC5	A	4	FIX32	VD	4	Ra/W	CINH
C1344	♦	♦	23234	5AC2	A	4	FIX32	VD	4	Ra	
C1345	♦	♦	23233	5AC1	A	4	FIX32	VD	4	Ra	
C1350	♦	♦	23228	5ABC	E	1	FIX32	VD	4	Ra/Wa	
C1351	♦	♦	23227	5ABB	E	1	FIX32	VD	4	Ra/Wa	
C1354	♦	♦	23224	5AB8	E	1	FIX32	VD	4	Ra/W	CINH
C1355	♦	♦	23223	5AB7	E	1	FIX32	VD	4	Ra/W	CINH
C1356	♦	♦	23222	5AB6	E	1	FIX32	VD	4	Ra/W	CINH
C1357	♦	♦	23221	5AB5	E	1	FIX32	VD	4	Ra	
C1358	♦	♦	23220	5AB4	E	1	FIX32	VD	4	Ra	
C1359	♦	♦	23219	5AB3	E	1	FIX32	VD	4	Ra	
C1360	♦	♦	23218	5AB2	E	1	FIX32	VD	4	Ra/Wa	
C1361	♦	♦	23217	5AB1	E	1	FIX32	VD	4	Ra/Wa	

Code	Controller		Index		Data					Access	
	EVF9321 ... EVF9333	EVF9335 ... EVF9383	dec	hex	DS	DA	DT	Format	DL	LCM-R/W	Condition
C1364	♦	♦	23214	5AAE	E	1	FIX32	VD	4	Ra/W	CINH
C1365	♦	♦	23213	5AAD	E	1	FIX32	VD	4	Ra/W	CINH
C1366	♦	♦	23212	5AAC	E	1	FIX32	VD	4	Ra/W	CINH
C1367	♦	♦	23211	5AAB	E	1	FIX32	VD	4	Ra	
C1368	♦	♦	23210	5AAA	E	1	FIX32	VD	4	Ra	
C1369	♦	♦	23209	5AA9	E	1	FIX32	VD	4	Ra	
C1370	♦	♦	23208	5AA8	E	1	FIX32	VD	4	Ra/Wa	
C1371	♦	♦	23207	5AA7	E	1	FIX32	VD	4	Ra/Wa	
C1372	♦	♦	23206	5AA6	E	1	FIX32	VD	4	Ra/Wa	
C1373	♦	♦	23205	5AA5	E	1	FIX32	VD	4	Ra/Wa	
C1375	♦	♦	23203	5AA3	E	4	FIX32	VD	4	Ra/W	CINH
C1376	♦	♦	23202	5AA2	E	1	FIX32	VD	4	Ra/W	CINH
C1377	♦	♦	23201	5AA1	A	4	FIX32	VD	4	Ra	
C1378	♦	♦	23200	5AA0	E	1	FIX32	VD	4	Ra	
C1583	♦	♦	22995	59D3	E	1	FIX32	VD	4	Ra/Wa	
C1751	♦	♦	22827	592B	A	17	FIX32	VD	4	Ra/W	CINH
C1753	♦	♦	22825	5929	E	1	FIX32	VD	4	Ra/W	CINH
C1754	♦	♦	22824	5928	E	1	FIX32	VD	4	Ra/W	CINH
C1755	♦	♦	22823	5927	E	1	FIX32	VD	4	Ra/W	CINH

9 Troubleshooting and fault elimination

Contents

9.1 Display of operating data, diagnostics 9.1-1
9.1.1 Display of operating data 9.1-1
9.1.2 Diagnostics 9.1-2
9.2 Troubleshooting 9.2-1
9.2.1 Status display via controller LEDs 9.2-1
9.2.2 Fault analysis with the history buffer 9.2-1
9.3 Drive behaviour in the event of faults 9.3-1
9.4 Fault elimination 9.4-1
9.4.1 Drive errors 9.4-1
9.4.2 Controller in clamp operation 9.4-2
9.4.3 Behaviour in case of overvoltage in the DC bus (OU message) 9.4-3
9.5 System error messages 9.5-1
9.5.1 General error messages 9.5-1
9.5.2 Resetting system error messages 9.5-5

9.1 Display of operating data, diagnostics

9.1.1 Display of operating data

Description

Important operating parameters are measured by the controller. They can be displayed with the keypad or PC.

Some operating data can be calibrated to be displayed or selected directly with the unit of the process quantity (e.g. pressure, temperature, speed).

Note!
The calibration always affects all specified codes simultaneously.

Codes for parameter setting

Code		Possible settings				IMPORTANT	
No.	Name	Lenze	Selection				
C0051	MCTRL-NACT		-36000	{1 rpm}	36000	Actual speed value, function block MCTRL ● Read only	📖 8.2-25 📖 8.2-48
C0052	MCTRL-Umot		0	{1 V}	800	Motor voltage, function block MCTRL ● Read only ● MCTRL-VACT = 100 % = C0090	📖 8.2-25 📖 8.2-48
C0053	UG-VOLTAGE		0	{1 V}	900	DC-bus voltage, function block MCTRL ● Read only ● MCTRL-DCVOLT = 100 % = 1000 V	📖 8.2-25 📖 8.2-48
C0054	IMot		0.0	{0.1 A}	500.0	Current motor current, function block MCTRL ● Read only ● MCTRL-IACT = 100 % = C0022	📖 8.2-25 📖 8.2-48
C0061	Heatsink temp		0	{1 °C}	100	Heatsink temperature ● Read only ● If the temperature of the heatsink > 85 °C, the controller sets TRIP OH ● Early warning is possible via OH4, temperature is set in C0122	See System Manual (extension)
C0063	Mot temp		0	{1 °C}	200	Motor temperature ● Read only ● Monitoring of the motor temperature must be activated. ● KTY at X8/5, X8/8: – At 150 °C, TRIP OH3 is set – Early warning is possible via OH7, temperature is set in C0121 ● PTC, thermal contact at T1, T2: – Release sets TRIP or warning OH8	📖 8.2-25 📖 8.2-48

Code		Possible settings					IMPORTANT	
No.	Name	Lenze	Selection					
C0064	Utilization		0		{1 %}	150	Device utilisation I×t ● Read only ● Device utilisation during the last 180 s of operating time ● C0064 > 100 % releases warning OC5 ● C0064 > 140 % limits the output current of the controller to 67 % of the maximum current in C0022	📖 8.2-25 📖 8.2-48
C0150	Status word		Bit00	–	Bit08	Status code	Read only Decimal status word for networking via automation interface (AIF) ● Binary interpretation indicates the bit states	See System Manual (extension)
			Bit01	IMP	Bit09	Status code		
			Bit02	–	Bit10	Status code		
			Bit03	–	Bit11	Status code		
			Bit04	–	Bit12	Warning		
			Bit05	–	Bit13	Message		
			Bit06	n = 0	Bit14	–		
			Bit07	CINH	Bit15	–		

9.1.2 Diagnostics

Description Display codes for diagnostics

Codes for parameter setting

Code		Possible settings			IMPORTANT	
No.	Name	Lenze	Selection			
C0093	DRIVE IDENT				Controller identification ● Read only	
			0	invalid	Damaged power section	
			1	none	No power section	
			9321 ... 9333	9321VC ... 9333VC	Display of the controller used	
C0099	S/W version		x.y x y	 Main version Subversion	Software version ● Read only	

9.2 Troubleshooting

Detecting breakdowns

A breakdown can be detected quickly via the LEDs at the controller or via the status information at the keypad.

Analysing errors

Analyse the error using the history buffer. The list of fault messages gives you advice how to remove the fault. (📖 9.5-1)

9.2.1 Status display via controller LEDs

During operation the operating status of the controller is shown by 2 LEDs.

LED		Operating status
Red ①	**Green** ②	
Off	On	Controller is enabled
On	On	Mains is switched on and automatic start is inhibited
Off	Blinking slowly	Controller is inhibited
Off	On	Motor data identification is being performed
Blinking quickly	Off	Undervoltage
Blinking slowly	Off	Active fault

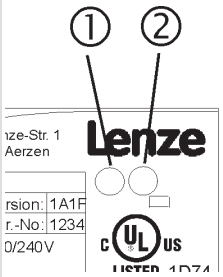

9.2.2 Fault analysis with the history buffer

Retracing faults

Faults can be retraced via the history buffer. Fault messages are stored in the 8 memory locations in the order of their appearance.

The memory locations can be retrieved via codes.

Structure of the history buffer

Code			Memory unit	Entry	Note
C0168/1	C0169/1	C0170/1	Memory unit 1	Active fault	If the fault is not available anymore or has been acknowledged: ● The contents of the memory locations 1 ... 7 are moved one memory location ”higher”. ● The contents of memory location 8 is deleted from the history buffer and cannot be retrieved anymore. ● Memory location 1 is deleted (= no active fault).
C0168/2	C0169/2	C0170/2	Memory unit 2	Last fault	
C0168/3	C0169/3	C0170/3	Memory unit 3	Second to last fault	
C0168/4	C0169/4	C0170/4	Memory unit 4	Third last fault	
C0168/5	C0169/5	C0170/5	Memory unit 5	Fourth-last fault	
C0168/6	C0169/6	C0170/6	Memory unit 6	Fifth-last fault	
C0168/7	C0169/7	C0170/7	Memory unit 7	Sixth-last fault	
C0168/8	C0169/8	C0170/8	Memory unit 8	Last but six fault	

Explanations regarding the codes	
C0168	**Fault recognition and response to the reaction** ● The entry is done as a LECOM error number ● If several faults with different reactions occur at the same time: – Only the fault is entered the reaction of which has the highest priority (1. TRIP, 2. message, 3. warning). ● If faults with the same reactions occur (e.g. 2 messages): – Only the fault which occurred first is entered. ● **Exception**: An OH3 warning has a higher priority than an OH7 warning. – A pending OH7 warning is overwritten by the OH3 warning. – After the OH3 warning has been cancelled, a pending OH7 warning will be displayed again.
C0169	**Time of the fault** ● Reference time is the status of the power-on time meter (C0179). ● If a fault is immediately followed by another fault for several times, only the time of the last occurrence is stored.
C0170	**Frequency of the fault** ● The time of the last occurrence is stored.

Delete history buffer

Set C0167 = 1 to delete the history buffer.

9.3 Drive behaviour in the event of faults

The controller responds differently to the three possible fault types TRIP, message, or warning:

TRIP

TRIP (display in keypad XT: IMP Fail)

- ► Switches the power outputs U, V, W to a high-resistance state until TRIP reset is executed.
- ► The fault indication is entered into the history buffer as ”current fault” in C0168/1.
- ► The drive coasts without any control!
- ► After TRIP reset (📖 9.5-5):
  - – The drive travels along the ramps to its setpoint.
  - – The fault indication is moved to C0168/2 as ”last fault”.

Messages

Message (display in keypad XT: IMP Fail)

- ► Switches the power outputs U, V, W to a high-resistance state.
- ► The fault indication is entered into the history buffer as ”current fault” in C0168/1.
- ► In case of a fault ≤5 s:
  - – The drive coasts without any control as long as the message is active!
  - – If the message is not active anymore, the drive travels to its setpoint with maximum torque.
- ► In case of a fault > 5 s:
  - – The drive coasts without any control as long as the message is active!
  - – If the message is not active anymore, the drive travels to its setpoint along the adjusted ramps.
- ► If the message is not active anymore, the fault indication is moved to C0168/2 as ”last fault”.

Warnings

”Heatsink overtemperature” (keypad XT:OH IMP Fail)

- ► The drive continues to travel in a controlled way!
- ► The warning signal goes off when the fault is not active anymore.

”Error in motor phase” (keypad XT:LP1)

”PTC monitoring” (keypad XT:OHS1)

- ► The drive continues to travel in a controlled way!
- ► The fault indication is entered into the history buffer as ”current fault” in C0168/1.
- ► After TRIP reset, the fault indication is moved to C0168/2 as ”last fault”.

9.4 Fault elimination

9.4.1 Drive errors

Malfunction	Cause	Remedy
An asynchronous motor with feedback rotates in an uncontrolled manner and with low speed	The motor phases are reversed so that the rotating field of the motor is not identical with the rotating field of the feedback system. The drive shows the following behaviour: ● V/f characteristic control (C0006 = 5) – The motor rotates faster than the speed setpoint by the value set in C0074 (influence of the speed controller, Lenze setting 10 % of n_{max}). After the controller is enabled, it does not stop at zero speed setpoint or quick stop (QSP). – The final motor current depends, among other things, on the set value of the V_{min} boost (C0016) and can rise to I_{max} (C0022). This may activate the fault message OC5. ● Vector control (C0006 = 1) – The motor rotates slowly with maximum slip speed (depending on motor data and maximum current) and does not react to a speed setpoint. The direction of rotation, however, is determined by the sign of the speed setpoint. – The motor current rises up to I_{max} (C0022). This may activate the fault message OC5 with a time delay.	● Check motor cable for correct phase relation. ● If possible, operate the motor with deactivated feedback (C0025 = 1) and check the direction of rotation of the motor.
Motor does not rotate although the controller is enabled (IMP is off) and a speed setpoint has been specified.	The two terminal strips X5 are reversed. Since X5/A1 and X5/28 face each other, the controller can be enabled if the control terminals are internally supplied. All other connections, however, are assigned incorrectly so that the motor cannot start.	Check the position of the terminal strips: ● If you look at the connection unit in reading direction, the left terminal strip X5 must be connected with the input signals and the right terminal strip X5 must be connected with the output signals.
The monitoring of the motor phases (LP1) does not respond if a motor phase is interrupted, although C0597 = 0 or 2	The function block MLP1 is not entered into the processing table.	Enter the function block MLP1 into the processing table. The function block MLP1 requires 30 µs of calculating time.
If during high speeds DC-injection braking (GSB) is activated, the fault OC1 (TRIP) or OU (TRIP) occurs	During DC-injection braking the controller sets pulse inhibit for a short time (DCTRL-IMP) to reduce the magnetisation in the motor before a DC voltage is injected into the motor. At high speeds (e. g. in case of mid-frequency motors) the residual voltage which develops from the residual magnetism and high speed can generate such a high motor current that OC1 or OU are activated.	Prolong the duration of the pulse inhibit: ● Connect the output signal DCTRL-IMP to the function block TRANSx and adjust the desired switch-off time there (usually 500 ms). If DCTRL-CINH1 is set to HIGH, the duration of the pulse inhibit is prolonged by the time adjusted.

9.4.2 Controller in clamp operation

The clamp operation is a permissible operating mode. But since, however, pulse inhibit is set again and again, the controller cannot provide the optimum power.

If the output power is optimal, the output current mainly is right below the clamp threshold.

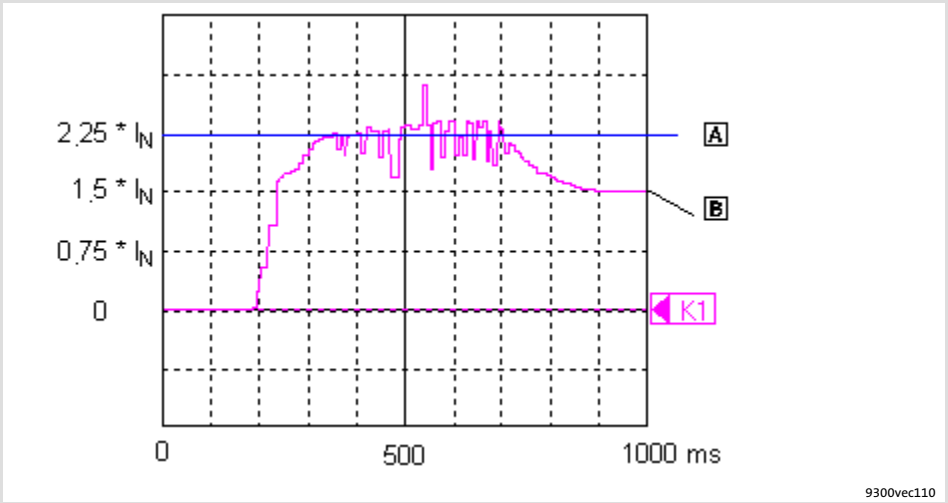

Fig. 9.4-1 Output current when starting a motor with high load (shown with the oscilloscope in GDC)

A Clamp threshold
B Output current

Function

1. When the output current reaches 2.25 × I_r, a software clamp is activated.
2. The controller sets pulse inhibit for a short time. The motor current decreases as a function of the inductance in the motor circuit.
   – An internal counter is increased by the value one.
3. After max. 250 µs the pulse inhibit is deactivated.
4. If a software clamp reoccurs within 2 s, the internal counter is again increased by the value one. Otherwise the counter is set to zero.
   – If the counter reaches the value 4300, OC3 (TRIP) is activated.

9.4.3 Behaviour in case of overvoltage in the DC bus (OU message)

Description

If the DC-bus voltage (U_{DC}) exceeds the switch-off threshold OU, the pulse inhibit is set. At the same time, an internal timing element starts for a delay time (C0912).

The pulse inhibit is deactivated if the voltage falls below the switch-on threshold OU and the delay time has elapsed.

Switching thresholds in case of overvoltage in the DC bus (OU):

Mains voltage range		C0173	Switch-off threshold OU	Switch-on threshold OU
< 400 V	Operation with / without brake chopper	0	770 V	755 V
400 V	Operation with / without brake chopper	1 *	770 V	755 V
460 V	Operation with / without brake chopper	2	770 V	755 V
480 V	Operation without brake chopper	3	770 V	755 V
480 V	Operation with brake chopper	4	800 V	785 V

* Lenze setting

Codes for parameter setting

Code		Possible settings			IMPORTANT	
No.	Name	Lenze	Selection			
C0912	OV delay time	→	-	{1 ms} -	Delay time of the pulse enable after an OU message → Depending on C0082, C0086, C0087, C0088, C0089, C0090, C0091, C0092 A change of one of the codes resets C0912 to the time of the selected motor ● The time is derived from the double rotor time constant	📖 8.2-25 📖 8.2-48 📖 9.4-3

Adjustment

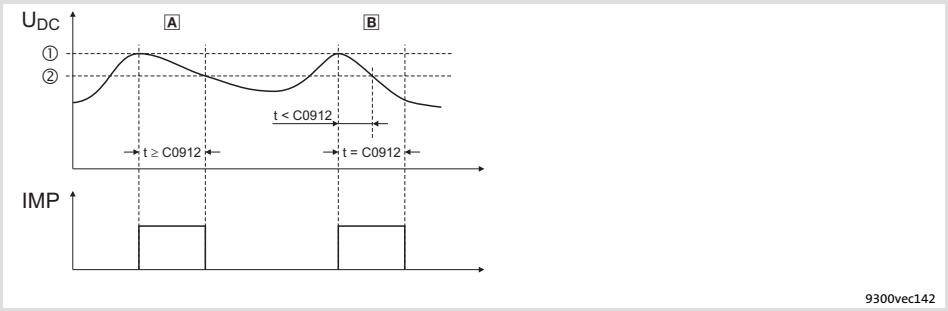

Fig. 9.4-2 Influence of the delay time (C0912)

① Switch-off threshold OU
② Switch-on threshold OU
A The period of time between exceeding the switch-off threshold OU and undershooting the switch-on threshold OU equals or is higher than the delay time set in C0912.
After undershooting the switch-on threshold OU, the pulse inhibit is deactivated.
B The period of time between exceeding the switch-off threshold OU and undershooting the switch-on threshold OU is lower than the delay time set in C0912.
The pulse inhibit is deactivated after the delay time in C0912 has elapsed.

► The delay time in [ms] is set under C0912. The Lenze setting can be changed by the factor 0.5 ... 2.

9.5 System error messages

9.5.1 General error messages

Note!
In the case of a query via system bus (CAN), the fault messages are represented as numbers (see first column of the table).

Fault message		Description	Cause	Remedy
No.	Display			
---	---	No fault	-	-
0011	OC1	Overcurrent in motor cable (I_a > 2.25 x I_N; Hardware monitoring)	In the event of a short circuit	● Search for the cause of the short circuit. ● Check the motor cable.
			Capacitive charging current of the motor cable is too high	Use motor cable which is shorter or of lower capacitance
			Too short acceleration or deceleration times in proportion to the load (C0012, C0013, C0105)	● Increase the gain (P component) of the Imax controller (C0075). ● Reduce integral-action time (integral action component) of the Imax controller (C0076)
			The drive is connected to the coasting machine. The coasting is caused by a short-time pulse inhibit, e.g. at ● OU (overvoltage in the DC bus) ● external or internal controller inhibit	● Activate flying restart circuit
			● Encoder error ● Tracks during encoder feedback of the motor speed are interchanged	Check wiring of the encoder
			DC-injection braking at high speeds	● See 📖 9.4-1
			Missing mains phase	● Check the connections and the supply cable of the device ● Check mains voltage
0012	OC2	Motor cable earth fault	One of the motor phases has earth contact.	● Search for cause of short circuit. ● Check motor cable.
0013	OC3	Overload during acceleration.	Too short acceleration or deceleration times in proportion to the load (C0012, C0013, C0105).	● Increase the gain (P component) of the current controller (C0075). ● Reduce the reset time (integral action component) of the I_{max} controller (C0076). ● Increase ramp times. ● 📖 9.4-2, ”controller in clamp operation (fault OC3)”
0015	OC5	I x t overload	● Frequent and too long acceleration with overcurrent ● Continuous overload with I_{motor} > 1.05 x $I_{rx.}$	Check drive dimensioning.
0016	OC6	I^2xt overload	● Frequent and too long acceleration processes with motor overcurrent. ● Permanent motor overload with I_{motor}>I_{rmotor}	Check drive dimensioning.

Fault message		Description	Cause	Remedy
No.	Display			
x018	OC8	I^2xt overload advance warning	● Frequent and too long acceleration processes with motor overcurrent. ● Permanent motor overload with $I_{motor}>I_{rmotor}$	Check drive dimensioning.
2020	OU	Overvoltage in the DC bus	Braking energy is too high. (DC-bus voltage is higher than set in C0173.)	● Use a braking unit or regenerative module. ● Check dimensioning of the brake resistor.
1030	LU	Undervoltage in the DC bus	DC bus voltage is lower than specified in C0173.	● Check mains voltage ● Check supply cable
x032	LP1	Motor phase failure	A current-carrying motor phase has failed.	● Check motor. ● Check motor cable. ● Switch off monitoring (C0597 = 3).
			The current limit value is set too low.	● Set higher current limit value via C0599.
0050	OH	Heatsink temperature > +90 °C	Ambient temperature T_u > +40 °C or > +50 °C	● Allow module to cool and ensure better ventilation. ● Check ambient temperature in the control cabinet.
			Heatsink is very dirty.	Clean heatsink.
			Wrong mounting position	Change mounting position.
x053	OH3	Motor temperature > +150 °C threshold (temperature detection via resolver or incremental value encoder)	Motor is thermally overloaded due to: ● Impermissible continuous current ● Frequent or too long acceleration processes	● Check drive dimensioning. ● Switch off monitoring (C0583 = 3).
			No PTC/temperature contact connected.	Correct wiring.
x054	OH4	Heatsink temperature > C0122	Ambient temperature T_u > +40 °C or > +50 °C	● Allow module to cool and ensure better ventilation. ● Check ambient temperature in the control cabinet. ● Switch off monitoring (C0582 = 3).
			Heatsink is very dirty.	Clean heatsink
			Wrong mounting position	Change mounting position.
			The value specified under C0122 is set too low.	Enter a higher value under C0122.
x057	OH7	Motor temperature > C0121 (temperature detection via resolver or incremental value encoder)	Motor is thermally overloaded due to: ● Impermissible continuous current ● Frequent or too long acceleration processes	● Check drive dimensioning. ● Switch off monitoring (C0584 = 3).
			No PTC/temperature contact connected.	Correct wiring.
			The value specified under C0121 is set too low.	Enter a higher value in C0121.
x058	OH8	Motor temperature via inputs T1 and T2 is too high.	Motor is thermally overloaded due to: ● Impermissible continuous current ● Frequent or too long acceleration processes	● Check drive dimensioning. ● Switch off monitoring (C0585 = 3).
			Terminals T1 and T2 are not connected	Connect PTC/temperature contact.

Fault message		Description	Cause	Remedy
No.	Display			
x061	CE0	Automation interface (AIF) communication error	Faulty transfer of control commands via AIF.	● Plug in the communication module/keypad XT firmly, screw down, if necessary. ● Switch off monitoring (C0126 = 3).
x062	CE1	Communication error on the process data input object CAN1_IN	CAN1_IN object receives faulty data or communication is interrupted.	● Check wiring at X4. ● Check sender. ● Increase monitoring time under C0357/1, if necessary. ● Switch off monitoring (C0591 = 3).
x063	CE2	Communication error on the process data input object CAN2_IN	CAN2_IN object receives faulty data or communication is interrupted.	● Check wiring at X4. ● Check sender. ● Increase monitoring time under C0357/2, if necessary. ● Switch off monitoring (C0592 = 3).
x064	CE3	Communication error on the process data input object CAN3_IN	CAN3_IN object receives faulty data or communication is interrupted.	● Check wiring at X4. ● Check sender. ● Increase monitoring time under C0357/3, if necessary. ● Switch off monitoring (C0593 = 3).
x065	CE4	BUS-OFF state of system bus (CAN)	The controller has received too many faulty telegrams via the system bus (CAN) and has disconnected from the bus.	● Check wiring at X4: Is the bus correctly terminated? ● Check shield connection of the cables. ● Check PE connection. ● Check bus load, reduce the baud rate if necessary. (Observe the cable length!) ● Switch off the monitoring (C0595 = 3).
0071	CCr	System failure	Strong interference injection on the control cables	Screen control cables
			Ground or earth loops in the wiring	● Check wiring ● Check PE connection
				After troubleshooting: Deenergise the device completely (disconnect 24 V supply, discharge DC bus)!
0072	PR1	Checksum error in parameter set 1 **CAUTION: The Lenze setting is loaded automatically!**	● Fault when loading a parameter set. ● Interruption while transmitting the parameter set via keypad.	● Set the required parameters and store them under C0003 = 1. ● As to PLC devices, check the use of pointers.
			The stored parameters are incompatible with the loaded software version.	Store the parameter set under C0003 = 1 first to allow for a faults reset.
0073	PR2	Checksum error in parameter set 2 **PLEASE NOTE: The Lenze setting is loaded automatically!**	● Fault while loading a parameter set. ● Interruption during the transfer of the parameter set via keypad.	● Set the required parameters and save them with C0003 = 2.
			The parameters saved do not comply with the software version loaded.	In order to be able to acknowledge the error, first save the parameter set with C0003 = 2.

Fault message		Description	Cause	Remedy
No.	Display			
0074	PEr	Program error	Error in the program flow	Send the parameter set (on floppy disk/CD-ROM) with a detailed description of the problem to Lenze. **After troubleshooting: Deenergise the device completely (disconnect 24 V supply, discharge DC bus)!**
0075	PR0	Error in parameter set.	The operating system software has been updated.	Storage of the Lenze setting C0003 = 1.
				After troubleshooting: Deenergise the device completely (disconnect 24 V supply, discharge DC bus)!
0077	PR3	Checksum error in parameter set 3 **PLEASE NOTE: The Lenze setting is loaded automatically!**	• Fault while loading a parameter set. • Interruption during the transfer of the parameter set via keypad.	• Set the required parameters and save them with C0003 = 3.
			The parameters saved do not comply with the software version loaded.	In order to be able to acknowledge the error, first save the parameter set with C0003 = 3.
0078	PR4	Checksum error in parameter set 4 **PLEASE NOTE: The Lenze setting is loaded automatically!**	• Fault while loading a parameter set. • Interruption during the transfer of the parameter set via keypad.	• Set the required parameters and save them with C0003 = 4.
			The parameters saved do not comply with the software version loaded.	In order to be able to acknowledge the error, first save the parameter set with C0003 = 4.
0079	PI	Fault during parameter initialisation	• An error has been detected during the parameter set transfer between two devices. • The parameter set does not match the controller, e.g. if data has been transferred from a higher-power controller to a lower-power controller.	• Correct parameter set. • Send parameter set (on floppy disk/CD-ROM) and a detailed description of the problem to Lenze.
x083	Sd3	Encoder error at X9	Cable interrupted.	Check cable for open circuit.
			Pin X9/8 not connected.	Apply 5 V to pin X9/8 or switch off monitoring (C0587 = 3).
x085	Sd5	Encoder error at X6/1 and X6/2 (C0034 = 1)	Current signal at X6/1 X6/2 < 2mA.	• Check cable for open circuit. • Check current signal encoder. • Switch off monitoring (C0598 = 3).
x086	Sd6	Motor temperature sensor error (X7 or X8)	Encoder for detecting the motor temperature at X7 or X8 indicates undefined values.	• Check cable for firm connection. • Switch off the monitoring (C0594 = 3).
x091	EEr	External monitoring has been triggered via **DCTRL**.	A digital signal assigned to the TRIP-SET function has been activated.	• Check external encoder. • Switch off the monitoring (C0581 = 3).
0105	H05	Internal fault (memory)		Contact Lenze.
0107	H07	Internal fault (power stage)	During initialisation of the controller, an incorrect power stage was detected.	Contact Lenze.
x110	H10	Heatsink temperature sensor error	Sensor for detecting the heatsink temperature indicates undefined values.	• Contact Lenze. • Switch off the monitoring (C0588 = 3).
x111	H11	Temperature sensor error: Temperature inside the controller	Sensor for detecting the internal temperature indicates undefined values.	• Contact Lenze. • Switch off the monitoring (C0588 = 3).

Fault message		Description	Cause	Remedy
No.	Display			
0140	ID1	Error during motor data identification.	No motor connected.	Check motor connection.
			Stator resistance too high.	Check entered motor data.
			Controller inhibited externally.	Enable controller and repeat motor data identification. The controller enable must be pending continuously until the end of the identification process.
0141	ID2	Error during motor data identification.	Motor too small.	● Check entered motor data. For parameterisation with Global Drive Control, use the input assistant for motor data. ● The measurements for the inverter error characteristic and the stator resistance are correct (save measured values in C0003). For the operating mode V/f characteristic control the motor data identification can be completed.
			Controller inhibited externally.	Enable controller and repeat motor data identification. The controller enable must be pending continuously until the end of the identification process.
x200	NMAX	Maximum system speed (C0596) has been exceeded.	● Active load (e.g. for hoists) is too high. ● Drive is not speed-controlled, torque is excessively limited.	● Check drive dimensioning. ● Increase torque limit, if necessary. ● Switch off monitoring (C0607 = 3).

Representation of the error number:
x 0 = TRIP, 1 = message, 2 = warning
E. g. ”2091”: An external monitoring function has triggered EEr warning

9.5.2 Resetting system error messages

Response	Measures for resetting the fault message
TRIP	**Note!** If a TRIP source is still active, the pending TRIP cannot be reset.
	Resetting the TRIP can be effected by: ● Pressing the keypad XT EMZ9371 BC ⇨ STOP. Then press RUN to re-enable the controller. ● Setting code C0043 = 0. ● Control word C0135, bit 11 ● Control word AIF ● Control word of system bus (CAN) After resetting the TRIP, the drive remains at standstill.
Message	**Danger!** After elimination of the fault, the fault message is cancelled automatically and the drive restarts automatically.
Warning	After elimination of the fault, the fault message is cancelled automatically.

10 DC-bus operation

Contents

10.1 Function 10.1-1
10.2 Conditions for trouble-free DC-bus operation 10.2-1
10.3 Fuses and cable cross-sections 10.3-1
10.4 Distributed supply (several supply points) 10.4-1
10.5 Central supply (one supply point) 10.5-1

10.1 Function

- DC-bus connections of drive systems enable the exchange of energy between connected controllers.
- If one or more controllers operate in generator mode (braking operation), the energy will be fed into the shared DC-voltage bus. The energy will then be available to the controllers which operate in motor mode.
- The use of braking units and supply units can be reduced.
- The energy consumption from the three-phase AC mains can be reduced.
- The number of mains supplies and the related expenses (e.g. wiring) can be perfectly adapted to your application.

10.2 Conditions for trouble-free DC-bus operation

- Distributed supply (parallel mains supply):
  - Always use the prescribed mains choke when connecting a controller to the mains.
  - Controllers of the EVx9321 ... EVx9333, 8200 and 8200 vector series must not be connected to the mains if they are operated in a DC-bus connection with EVx9335 ... EVx9338 and EVx9381 ... EVx9383 controllers.
- Only controllers with identical mains voltage/DC bus voltage ranges can be operated in a DC-bus connection:
  - Set the mains voltage/DC-bus voltage under C0173.
- 9340 regenerative power supply modules and 9360 DC input modules cannot be used together in the DC-bus connection.
- Read the documentation for the other controllers connected to the DC bus with regard to ”DC-bus operation”.

10.3 Fuses and cable cross-sections

Note!

- ► **All fuses specified here only have the purpose of disconnection after a short circuit.** For cable protection specific fuses must be used.
- ► In the following tables the rated currents of the Lenze fuses are listed. If other fuses are used, other fuse currents and cable cross-sections may result.
- ► We recommend using fuse holders with a signalling contact. Like this, the entire drive system can be switched off (inhibited) when a fuse fails.
- ► Always fuse DC cables using 2 poles ($+U_G$, $-U_G$).

Installation in accordance with EN 60204-1

Supply conditions	
Range	Description
Mains	DC 460 ... 740 V
Fuses	● Only semiconductor fuses. ● If you are using fuses other than those indicated, other fuse currents and cable cross-sections may result.
Cables	● DC cables ($+U_G$, $-U_G$) must always have two-pole insulation. ● Laying systems B2 and C: Use of PVC-insulated copper cables, conductor temperature < 70 °C, ambient temperature < 40 °C, no bundling of cables or cores, three loaded cores. The information is a recommendation. Other designs/laying systems are possible (e.g. according to VDE 0298-4).
Observe all national and regional regulations!	

Inverter		DC fuse 14 × 51 (EFSGR0xx0AYHx)	DC fuse 22 × 58 (EFSGR0xx0AYIx)	Installation in accordance with EN 60204-1	
Type	Mains	Rated current of fuse	Rated current of fuse	$+U_G$, $-U_G$ Laying system	
				B2	C
		[A]	[A]	[mm²]	[mm²]
EVF9321-xV	3/PE 400 V	12	12	1.5	1.5
EVF9322-xV		12	12	1.5	1.5
EVF9323-xV		12	12	1.5	1.5
EVF9324-xV		20	20	1.5	1.5
EVF9325-xV		40	40	4	4
EVF9326-xV		50	50	6 [1)]	4

1) Pin-end connector required, since a maximum cable cross-section of 4 mm² can be connected to the inverter.

Inverter		DC fuse NH1 (EFSGRxxx0ANVx)	DC fuse 22 × 58 (EFSGR0xx0AYIx)	Installation in accordance with EN 60204-1	
Type	Mains	Rated current of fuse	Rated current of fuse	$+U_G$, $-U_G$ Laying system	
				B2	C
		[A]	[A]	[mm²]	[mm²]
EVF9327-xV	3/PE 400 V	100	100	-	25
EVF9328-xV		100	100	-	25
EVF9329-xV		200	-	-	25
EVF9330-xV		200	-	-	50

Inverter		DC fuse NH2 (EFSGRxxx0ANWx)	DC fuse 22 × 58 (EFSGR0xx0AYIx)	Installation in accordance with EN 60204-1	
Type	Mains	Rated fuse current	Rated fuse current	$+U_G$, $-U_G$ Laying system	
				F	C
		[A]	[A]	[mm²]	[mm²]
EVF9331-xV	3/PE 400 V	250	-	-	95
EVF9332-xV		350	-	-	95
EVF9333-xV		350	-	95	-

10.4 Distributed supply (several supply points)

Basic circuit diagram

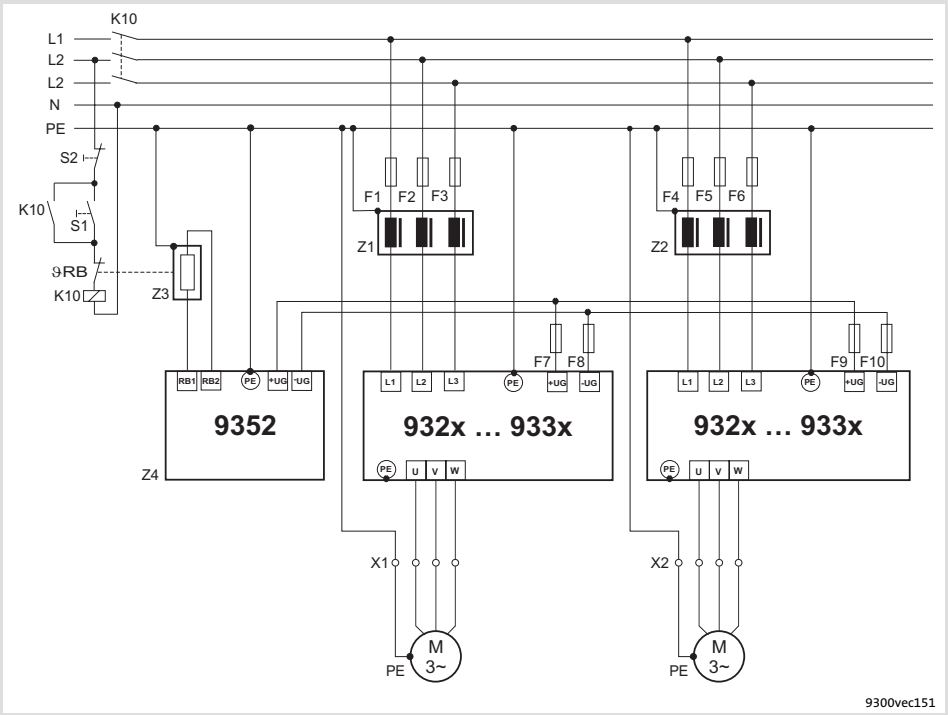

Fig. 10.4-1 Basic circuit diagram of a distributed supply with brake chopper

F1 ... F10	Fusing
K10	Mains contactor
Z1, Z2	Mains choke / mains filter
Z3	Brake resistor
Z4	Brake chopper
S1	Mains supply on
S2	Mains supply off

► Dimension the components according to the requirements of the DC-bus operation.

Stop!

Set the DC-bus voltage thresholds of the controller (C0173) and the brake chopper (see documentation of the brake chopper) to the same values.

10.5 Central supply (one supply point)

Basic circuit diagram

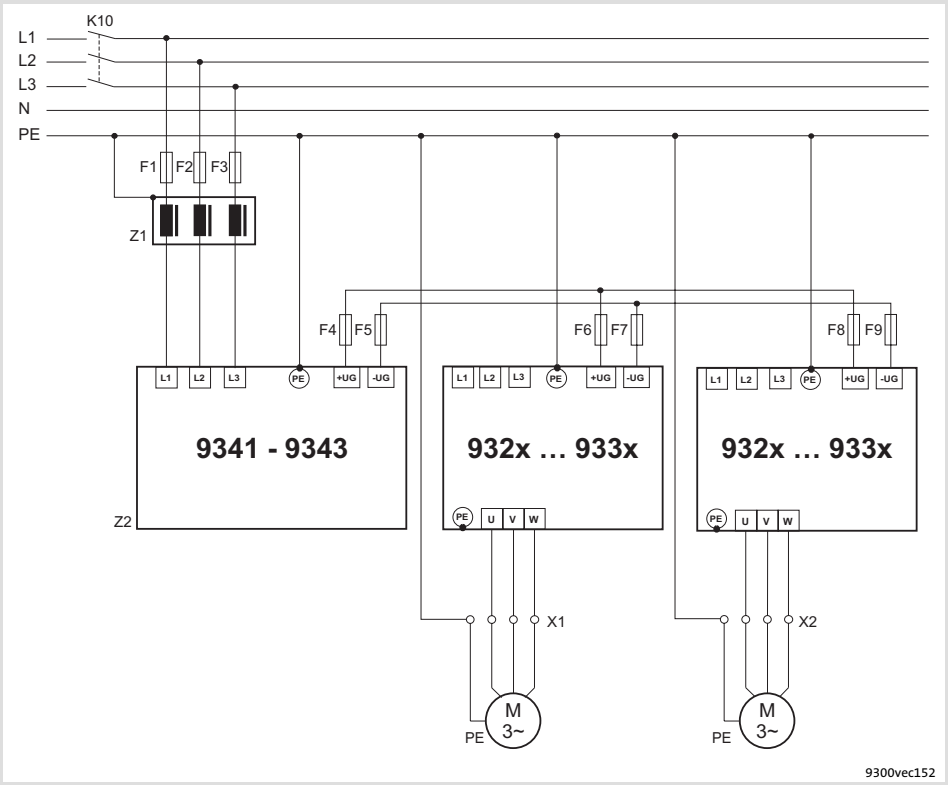

Fig. 10.5-1 Basic circuit diagram of a central supply with regenerative power supply module

F1 ... F9	Fusing
K10	Mains contactor
Z1	Mains choke / mains filter
Z2	Regenerative power supply module

► Dimension the components according to the requirements of the DC-bus operation.

Note!

► If the supply power of the regenerative power supply module is not sufficient, the system can be additionally supplied via the mains connection of further controllers.

► Before connecting the supply module and the controllers read the Operating Instructions of the regenerative power supply module.

11 Safety engineering

Contents

11.1 Important notes 11.1-1
11.2 Operating mode 11.2-1
11.3 Safety relay KSR 11.3-1
11.4 Functional test 11.4-1
11.4.1 Important notes 11.4-1
11.4.2 Manual safety function check 11.4-2
11.4.3 Monitoring the safety function with a PLC 11.4-3

11.1 Important notes

Stop!

In the case of the devices EVF9335 ... EVF9383 of variants V060, V110, V270, and V300, the integrated brake transistor is deactivated if the ”Safe torque off” function is active.

The controllers of variants V004 and V024 support the safety functions ”Safe torque off” (old designation ”safe standstill”), ”Protection against unexpected start-up”, in accordance with the requirements of control category 3 of EN 954 Part 1 and Part 2. Depending on the external wiring, a standard up to category ”3” in accordance with EN 954-1 is achieved.

Note!

In order to comply with control category 3 in accordance with EN 954-1, the two methods ”Pulse inhibit via safety relay K_{SR}” **and** ”Controller inhibit”, which are independent of each other, have to be used.

► Only qualified personnel may install and commission the “Safe torque off” function.

► All control components (switches, relays, PLC, ...) and the control cabinet must comply with the requirements of EN ISO 13849-1 and EN ISO 13849-2. This includes among other things:
- Control cabinet, switches, relays in enclosure IP54!
- All other requirements can be found in EN ISO 13849-1 and EN ISO 13849-2!

► Wiring with insulated wire end ferrules or rigid cables is absolutely required.

► All safety-relevant cables (e.g. control cable for the safety relay, feedback contact) outside the control cabinet must be protected, e.g. by a cable duct. It must be ensured that short circuits between the individual cables cannot occur!

► With the “Safe torque off” function no emergency stop can be effected without additional measures:
- There is neither an electrical isolation between motor and controller nor a service or repair switch!
- An ”Emergency stop” requires the electrical isolation of the conductor to the motor, e.g. by means of a central mains contactor with emergency stop wiring.

► If in the case of the ”Safe torque off” a force effect is to be expected from outside, (e.g. sagging of hanging loads), additional measures are required (e.g. mechanical brakes).

► After the installation the operator has to check the function of the ”Safe torque off” circuit.
  – The functional test must be repeated at regular intervals.
  – Basically, the inspection intervals depend on the application, the related risk analysis, and the overall system. The inspection intervals must not be longer than 1 year.

11.2 Operating mode

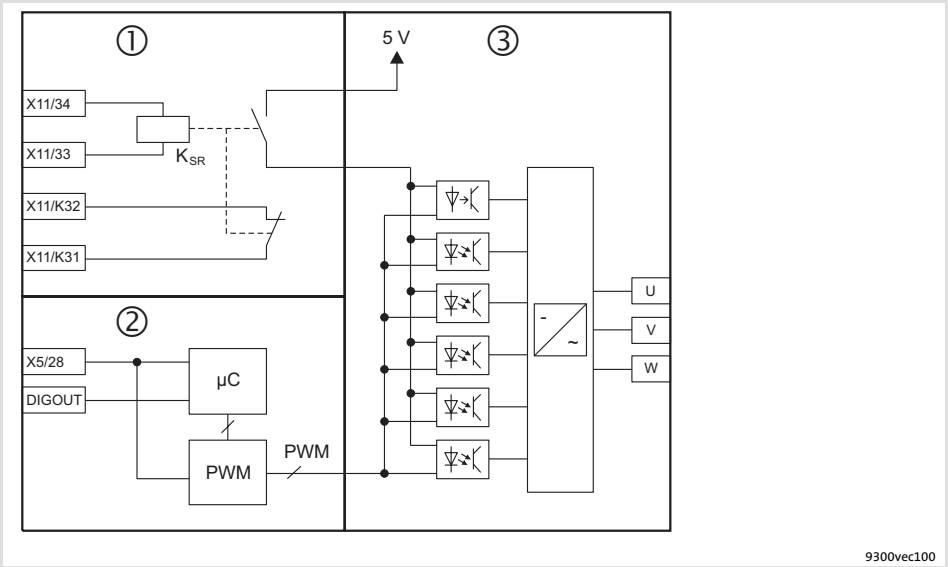

Fig. 11.2-1 Internal connection of the ”Safe torque off” function with 3 electrically isolated circuits

Area ①:	Pulse inhibit via safety relay K_{SR}; forcibly guided feedback for monitoring the safety relay
Area ②:	Controller inhibit (X5/28), optional feedback via a digital output (DIGOUT)
Area ③:	Power output stage

Activating ”Safe torque off”

The ”Safe torque off” status is activated via two different disconnecting paths which are independent of each other:

1. disconnecting path: Pulse inhibit via safety relay K_{SR} (terminal X11/33, X11/34)

► In the case of LOW level at terminals X11/33, X11/34, the safety relay K_{SR} is deactivated.The driver supply of the power section drivers is interrupted. The inverter no longer receives pulses.

► The disconnection of the safety relay K_{SR} has to be monitored externally, so that a failure of this disconnecting path can be detected. X11/K31, X11/K32 is a forcibly guided break contact, i. e. if the safety relay K_{SR} has been deactivated (”Safe torque off” activated), the contact is closed.

2. disconnecting path: Controller inhibit by input signal at terminal X5/28

► The input signal at X5/28 is fed to the microcontroller system and the PWM unit. In the case of LOW level at terminal X5/28, the output of pulses to the inverter is inhibited in the microcontroller system.

► The disconnecting path ”Controller inhibit” can be evaluated optionally via a digital output. Further information can be gathered from the chapter ”Functional test” (📖 11.4-1).

”Safe torque off” is activated if **both disconnecting paths are on LOW level**.

Deactivating ”Safe torque off”

An AND operation of the disconnecting paths prevents the drive from restarting if only one disconnecting path is enabled.

”Safe torque off” is deactivated if **both disconnecting paths are on HIGH level**.

11.3 Safety relay K_{SR}

Technical data

Terminal	Description	Field	Values
X11/K32 X11/K31 X11/33 X11/34	Safety relay K_{SR} 1st disconnecting path	Coil voltage at +20 °C	DC 24 V (20 ... 30 V)
		Coil resistance at +20 °C	823 Ω ±10 %
		Rated coil power	Approx. 700 mW
		Max. switching voltage	AC 250 V, DC 250 V (0.45 A)
		Max. AC switching capacity	1500 VA
		Max. switching current (ohmic load)	AC 6 A (250 V), DC 6 A (50 V)
		Recommended minimum load	> 50 mW
		Max. switching rate	6 switchings per minute
		Mechanical service life	10^7 switching cycles
		Electrical service life	
		at 250 V AC (ohmic load)	10^5 switching cycles at 6 A 10^6 switching cycles at 1 A 10^7 switching cycles at 0.25 A
		at 24 V DC (ohmic load)	6×10^3 switching cycles at 6 A 10^6 switching cycles at 3 A 1.5×10^6 switching cycles at 1 A 10^7 switching cycles at 0.1 A

Terminal data

Wiring of the terminals X11/34, X11/33, X11/K32, X11/K31, X5/28:

Leitungstyp	Wire end ferrule	Cable cross-section	Tightening torque	Stripping length
Rigid	–	2,5 mm^2 (AWG 14)	0,5 ... 0,6 Nm (4.4 ... 5.3 lb-in)	5 mm
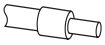 Flexible	With plastic sleeve	2,5 mm^2 (AWG 14)		

Wiring

Danger!

Faulty operation in case of earth faults possible

The correct functioning of the safety function is not ensured if an earth fault occurs.

Possible consequences:

► A failure of the safety function can lead to death, severe injuries or damage to material.

Protective measures:

The electrical reference point for the coil of the safety relay K_{SR} must be connected to the PE conductor system (EN 60204-1, paragraph 9.4.3)!

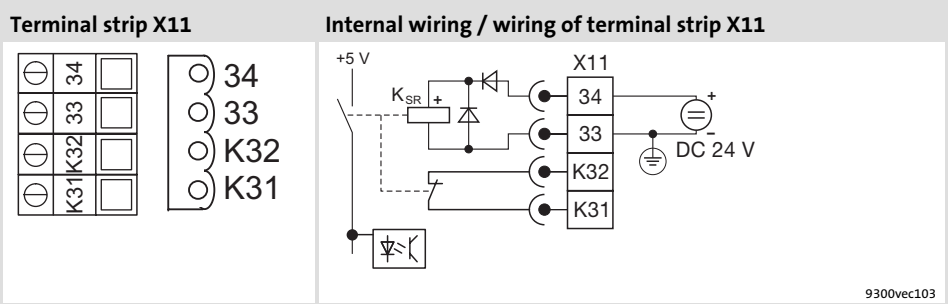

Fig. 11.3-1 Safety relay K_{SR}

Terminal		Function Bold print = **Lenze setting**	Level / state	Electrical data
X11/K32 X11/K31	Safety relay K_{SR} 1st disconnecting path	Feedback - pulse inhibit	Open contact: Pulse inhibit is inactive (operation) Closed contact: Pulse inhibit is active	See technical data of the safety relay K_{SR}
X11/33		– coil of safety relay K_{SR}	Coil is not carrying any current: pulse inhibit is active	
X11/34		+ coil of safety relay K_{SR}	Coil is carrying current: pulse inhibit is inactive (operation)	
X5/28	Controller inhibit (DCTRL-CINH) 2nd disconnecting path	Controller enable/inhibit	LOW: Controller inhibited HIGH: Controller enabled	LOW: 0 ... +3 V HIGH: +12 ... +30 V
				Input current at +24 V: 8 mA
				Reading and processing the input signals - 1/ms (mean value)

11.4 Functional test

11.4.1 Important notes

Danger!

Unexpected start-up of the machine possible

The ”Safe torque off” safety function provides protection against an unexpected start-up of the drive and therefore is an important item within the safety concept for a machine. It has to be ensured that this function works correctly.

Possible consequences:

► Death, severe injury, or damage to material assets, when the safety function fails.

Protective measures:

After the installation and at regular intervals, the operator has to check the function of the ”Safe torque off” circuit.

► When doing this, check both disconnecting paths separately with regard to their disconnection capability.

► The functional test can be carried out manually or automatically via the PLC.

► Basically the inspection interval depends on the application and the corresponding risk analysis, as well as on the system as a whole. It should not exceed 1 year.

► If the functional test shows impermissible states,
– the drive or the machine has to be shut down immediately.
– commissioning is not permitted until the safety function operates correctly.

11.4.2 Manual safety function check

For the functional test, check both disconnecting paths **separately**.

1. disconnecting path: Pulse inhibit via safety relay K_{SR}

How to proceed during the test:

1. Alternately apply LOW and HIGH level to input X11/34 and check the states given in the table below.

	Specification	Correct status
Individual test	**Input relay activation (X11/34)**	**Output feedback (X11/K31)**
Pulse inhibit	LOW	HIGH
Pulse enable	HIGH	LOW

The individual tests are passed if the correct states given in the table result.

2. disconnecting path: Controller inihibit

Requirement for the test:

► ”Quickstop” (QSP) function deactivated

► ”Automatic DC injection brake” deactivated (C0019 = 0)

► Pulses enabled by the safety relay K_{SR} (X11/34 = HIGH)

How to proceed during the test:

1. Set controller inhibit (X5/28 = LOW).
2. Define a setpoint n_{set} > 0.
3. Check that the motor is not rotating.

The individual test is passed if the motor does not rotate.

Functional test not passed

If an individual test results in an impermissible status, the functional test is not passed.

► The drive or machine has to be shut down immediately.

► Commissioning is not permitted until the safety function operates correctly.

11.4.3 Monitoring the safety function with a PLC

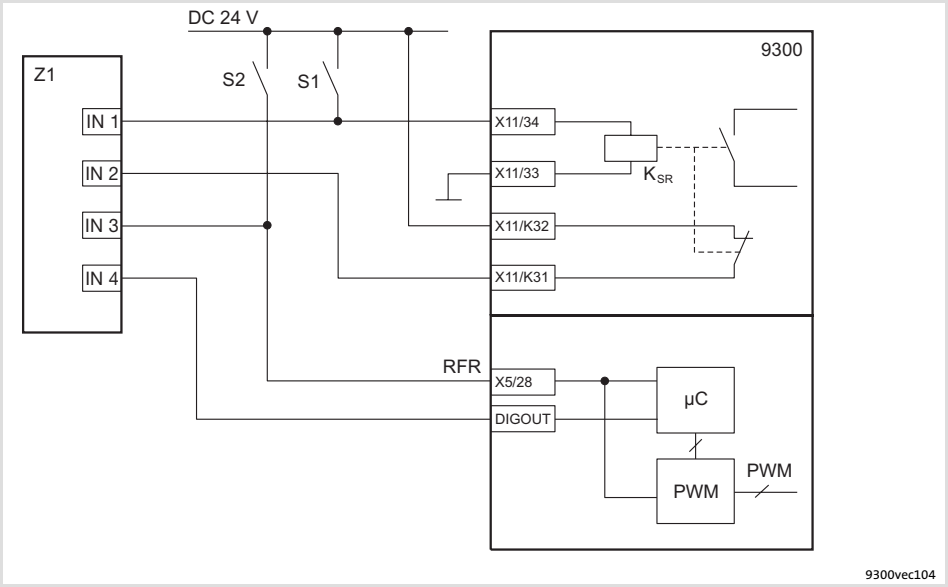

Fig. 11.4-1 Circuit diagram for monitoring the safety function with a PLC

S1, S2	Separate disconnection options of the two disconnecting paths
K_{SR}	Safety relay
X11/34	Safety relay control
X11/33	Safety relay control (GND)
X11/K32	Forcibly guided feedback contact (24 V)
X11/K31	Forcibly guided feedback contact
DIGOUT	Digital output for evaluating the motor current
X5/28	Controller inhibit
Z1	Programmable logic controller (PLC)
IN 1 - 4	Digital inputs

Requirements

The following conditions must be met:

- ► The PLC must be programmed such that the complete system is set to a safe state immediately when the function check leads to an impermissible state.
- ► The parameter setting of a digital output must be such that you can conclude to the output current I_{motor} of the drive (see parameterisation example).

Example: Parameterising a digital output

In the following we will show you a possibility of parameterising a digital output, so that a conclusion with regard to the motor current is provided.

Sequence		Parameter	Note
1.	Configure function block CMP3 (comparator)		
	● Connect CMP3-IN1 to MCTRL-IACT	C0693/1 = 5004	
	● Connect CMP3-IN2 to FCODE-472/1	C0693/2 = 19521	
	● Configure the function IN1 < IN2	C0690 = 3	
2.	Configure output signal of CMP3 ● Connect DIGOUT4 to CMP3-OUT	C0117/4 = 10660	
3.	Enter function block CMP3 in the processing table		
	● Select a free space in the processing table In the Lenze setting, for instance space 2 of the processing table is free	C0465/2 = 10660	
4.	Set the current threshold ● Set the current threshold for I_{rated_FI} to 2 %	C0472/1 = 2.00	$I_{Motor} = 0 \rightarrow$ DIGOUT4 = HIGH $I_{Motor} \neq 0 \rightarrow$ DIGOUT4 = LOW

Functional test within the inspection interval

For the functional test, check both disconnecting paths **separately**.

1. disconnecting path: Pulse inhibit via safety relay K_{SR}

The individual tests are passed if the correct states given in the table result.

	Specification	Correct status
Individual test	**Input relay activation (X11/34)**	**Output feedback (X11/K31)**
Pulse inhibit	LOW	HIGH
Pulse enable	HIGH	LOW

2. disconnecting path: Controller inihibit

Requirement for the test:

► ”Quickstop” (QSP) function deactivated

► ”Automatic DC injection brake” deactivated (C0019 = 0)

► Pulses enabled by the safety relay K_{SR} (X11/34 = HIGH)

The individual tests are passed if the correct states given in the table result.

	Specification		Correct status
Individual test	**X5/28**	**Setpoint**	**Output DIGOUT**
Controller inhibit	LOW	$n_{set} > 0$	HIGH
Controller enable	HIGH		LOW

Functional test not passed

If an individual test results in an impermissible status, the functional test is not passed.

► The drive or machine has to be shut down immediately.

► Commissioning is not permitted until the safety function operates correctly.

12 Accessories (overview)

Contents

12.1 General accessories 12.1-1
12.2 Type-specific accessories 12.2-1
12.2.1 Operation with rated power 12.2-1
12.2.2 Operation with increased rated power 12.2-3

12.1 General accessories

Accessories	Designation		Order number
Communication modules	LECOM-LI (optical fibre)		EMF2102IBCV003
	LECOM-B (RS485)		EMF2102IBCV002
	LECOM-A/B (RS232/485)		EMF2102IBCV001
	LON		EMF2141IB
	INTERBUS		EMF2113IB
	INTERBUS-Loop		EMF2112IB
	PROFIBUS-DP		EMF2133IB
	DeviceNet/CANopen		EMF2175IB
	Operating module keypad XT		EMZ9371BC
	Diagnosis terminal (keypad XT in handheld design, IP20) [1)]		E82ZBBXC
Other	Connecting cable	2.5 m	E82ZWL025
		5 m	E82ZWL050
		10 m	E82ZWL100
	Parameterisation/operating software »Global Drive Control« (GDC)		ESP-GDC2
	PC system bus adapter (Voltage supply via DIN connection)		EMF2173IB
	PC system bus adapter (Voltage supply via PS2 connection)		EMF2173IB-V002
	PC system bus adapter (Voltage supply via PS2 connection, electrical isolation)		EMF2173IB-V003
	PC system bus adapter USB		EMF2177IB
	CAN repeater		EMF2176IB
	PC system cable RS232	5 m	EWL0020
		10 m	EWL0021
	Optical fibre adapter (standard output power)		EMF2125IB
	Optical fibre adapter (increased output power)		EMF2126IB
	Power supply unit for optical fibre adapter		EJ0013
	Optical fibre, single-core, black PE sheath (basic protection), sold by the meter		EWZ0007
	Optical fibre, single-core, red PUR sheath (reinforced protection), sold by the meter		EWZ0006
	Setpoint potentiometer		ERPD0010k0001W
	Rotary knob for setpoint potentiometer		ERZ0001
	Scale for setpoint potentiometer		ERZ0002
	Digital display		EPD203
	Encoder cable	2.5 m	EWLE002GX-T
		5.0 m	EWLE005GX-T
		10.0 m	EWLE010GX-T
		15.0 m	EWLE015GX-T
		20.0 m	EWLE020GX-T
		25.0 m	EWLE025GX-T
		30.0 m	EWLE030GX-T
		35.0 m	EWLE035GX-T
		40.0 m	EWLE040GX-T
		45.0 m	EWLE045GX-T
		50.0 m	EWLE050GX-T

Accessories	Designation		Order number
	Connecting cable for digital frequency coupling	2.5 m	EWLD002GGBS93

1) Additional connecting cable required

Tip!

Information and auxiliary devices related to the Lenze products can be found in the download area at

http://www.Lenze.com

12.2 Type-specific accessories

12.2.1 Operation with rated power

9300 vector	EVF9321	EVF9322	EVF9323
Accessories	Order No.		
Mains choke	EZN3A2400H002	EZN3A1500H003	EZN3A0900H004
Mains filter			
Category C2 EN 61800-3	EZN3A2400H002	EZN3A1500H003	EZN3A0900H004
Category C1 EN 61800-3	EZN3B2400H002	EZN3B1500H003	EZN3B0900H004
Motor filter	ELM3-030H004	ELM3-030H004	ELM3-030H004
Sinusoidal filter	EZS3-002A001	EZS3-002A001	EZS3-004A001
Brake chopper	EMB9352-E	EMB9352-E	EMB9352-E
Brake resistor	ERBM470R050W	ERBM470R100W	ERBM370R150W
Shield connection			
Steuerleitung	EZZ0015	EZZ0015	EZZ0015
Motor cable	EZZ0016	EZZ0016	EZZ0016
Mounting set for push-through technique	EJ0036	EJ0036	EJ0037

9300 vector	EVF9324	EVF9325	EVF9326
Accessories	Order No.		
Mains choke	EZN3A0500H007	EZN3A0300H013	ELN3-0150H024-001
Mains filter			
Category C2 EN 61800-3	EZN3A0500H007	EZN3A0300H013	EZN3A0150H024
Category C1 EN 61800-3	EZN3B0500H007	EZN3B0300H013	EZN3B0150H024
Motor filter	ELM3-014H010	ELM3-007H025	ELM3-007H025
Sinusoidal filter	EZS3-007A002	EZS3-013A001	EZS3-024A001
Brake chopper	EMB9352-E	EMB9352-E	EMB9352-E
Brake resistor	ERBD180R300W	ERBD100R600W	ERBD047R01K2
Shield connection			
Control cable	EZZ0015	EZZ0015	EZZ0015
Motor cable	EZZ0016	EZZ0016	EZZ0016
Mounting set for push-through technique	EJ0037	EJ0038	EJ0038

9300 vector	EVF9327	EVF9328	EVF9329
Accessories	Order No.		
Mains choke	ELN3-0075H045	ELN3-0055H055	–
Mains filter			
Category C2 EN 61800-3	EZN3A0080H042 E82ZN22334B230	EZN3A0055H060 E82ZN30334B230	EZN3B0055H060N003
Category C1 EN 61800-3	EZN3B0080H042 E82ZN22334B230	EZN3B0055H060 E82ZN30334B230	EZN3B0055H060N003
Motor filter	ELM3-004H055	ELM3-004H055	–
Brake chopper	EMB9352-E	EMB9352-E	EMB9352-E
Brake resistor	ERBD033R02K0	ERBD022R03K0	ERBD018R03K0
Shield connection			
Control cable	EZZ0015	EZZ0015	EZZ0015
Motor cable	EZZ0017	EZZ0017	EZZ0017
Mounting set for push-through technique	EJ0011	EJ0011	EJ0011

9300 vector	EVF9330	EVF9331	EVF9332	EVF9333
Accessories	Order No.			
Mains choke	ELN3-0027H105-001	ELN3-0027H105-001	ELN3-0017H170	ELN3-0014H200
Mains filter				
Category C2 EN 61800-3	EZN3A0030H110 E82ZN55334B230	EZN3A0030H110 EZN3A0030H110N001 [3)]	EZN3A0017H200 E82ZN90334B230	EZN3A0015H230 EZN3A0017H200
Category C1 EN 61800-3	E82ZN55334B230 EZN3B0030H110N001 [3)]	EZN3B0030H110	EZN3B0017H200 E82ZN90334B230	EZN3B0015H230 EZN3B0017H200
Brake chopper	2 × EMB9352-E	2 × EMB9352-E	3 × EMB9352-E	3 × EMB9352-E
Brake resistor	2 × ERBD022R03K0	2 × ERBD018R03K0	3 × ERBD022R03K0	3 × ERBD018R03K0
Shield connection control cable	EZZ0015	EZZ0015	EZZ0015	EZZ0015
Mounting set for push-through technique	EJ0010	EJ0010	EJ0009	EJ0009

[3)] For controllers with thermal separation

12.2.2 Operation with increased rated power

9300 vector	EVF9321	EVF9322	EVF9323	EVF9324
Accessories	Order No.			
Mains choke	EZN3A2400H002	EZN3A1500H003	EZN3A0750H005	EZN3A0400H009
Mains filter				
Category C2 EN 61800-3	EZN3A2400H002	EZN3A1500H003	EZN3A0750H005	EZN3A0400H009
Category C1 EN 61800-3	EZN3B2400H002	EZN3B1500H003	EZN3B0750H005	EZN3B0400H009
Motorfilter	ELM3-030H004	ELM3-030H004	ELM3-014H010	ELM3-007H025
Sinusfilter	EZS3-002A001	EZS3-004A001	EZS3-006A001	EZS3-009A002
Brake chopper	EMB9352-E	EMB9352-E	EMB9352-E	EMB9352-E
Brake resistor	ERBM470R050W	ERBM470R100W	ERBM370R150W	ERBD180R300W
Shield connection				
Control cable	EZZ0015	EZZ0015	EZZ0015	EZZ0015
Motor cable	EZZ0016	EZZ0016	EZZ0016	EZZ0016
Mounting set for push-through technique	EJ0036	EJ0036	EJ0037	EJ0037

9300 vector	EVF9325	EVF9327	EVF9328	EVF9329
Accessories	Order No.			
Mains choke	EZN3A0300H013	ELN3-0075H045	ELN3-0055H055	–
Mains filter				
Category C2 EN 61800-3	EZN3A0300H013	EZN3A0080H042 E82ZN22334B230	EZN3A0060H054 E82ZN30334B230	EZN3B0055H060N003
Category C1 EN 61800-3	EZN3B0250H015	EZN3B0080H042 E82ZN22334B230	EZN3B0055H060 E82ZN30334B230	EZN3B0055H060N003
Motorfilter	ELM3-007H025	ELM3-004H055	–	–
Sinusfilter	EZS3-017A001	–	–	–
Brake chopper	EMB9352-E	EMB9352-E	EMB9352-E	EMB9352-E
Brake resistor	ERBD100R600W	ERBD033R02K0	ERBD022R03K0	ERBD018R03K0
Shield connection				
Control cable	EZZ0015	EZZ0015	EZZ0015	EZZ0015
Motor cable	EZZ0016	EZZ0017	EZZ0017	EZZ0017
Mounting set for push-through technique	EJ0038	EJ0011	EJ0011	EJ0011

9300 vector	EVF9330	EVF9331	EVF9332	EVF9333
Accessories	Order No.			
Mains choke	ELN3-0027H105	ELN3-0027H105-001	ELN3-0017H170	ELN3-0014H200
Mains filter				
Category C2 EN 61800-3	EZN3A0030H110 E82ZN55334B230	EZN3A0030H110 EZN3A0030H110N001 [3]	EZN3A0017H200 E82ZN90334B230	EZN3A0015H230 EZN3A0017H200
Category C1 EN 61800-3	E82ZN55334B230 EZN3B0030H110 EZN3B0030H110N001 [3]	EZN3B0030H110	EZN3B0017H200 E82ZN90334B230	EZN3B0015H230 EZN3B0017H200
Brake chopper	2 × EMB9352-E	2 × EMB9352-E	3 × EMB9352-E	3 × EMB9352-E
Brake resistor	2 × ERBD022R03K0	2 × ERBD018R03K0	3 × ERBD022R03K0	3 × ERBD018R03K0
Shield connection control cable	EZZ0015	EZZ0015	EZZ0015	EZZ0015
Mounting set for push-through technique	EJ0010	EJ0010	EJ0009	EJ0009

[3] For controllers with thermal separation

13 Appendix

Contents

13.1 Glossary 13.1-1
13.1.1 Terminology and abbreviations used 13.1-1
13.2 Index 13.2-1

13.1 Glossary

13.1.1 Terminology and abbreviations used

🕮	Cross-reference to a chapter with the corresponding page number
AC	AC current or AC voltage
AIF	**Automation interface** AIF interface, interface for communication modules
CE	Communauté Européene
Controller	Any frequency inverter, servo inverter, or DC speed controller
Cxxxx/y	Subcode y of code Cxxxx (e. g. C0404/2 = subcode 2 of code C0404)
DC	DC current or DC voltage
DIN	Deutsches Institut für Normung(German Institute for Standardization)
Drive	Lenze controller in combination with a geared motor, a three-phase AC motor, and other Lenze drive components
EMC	Electromagnetic compatibility
EN	European standard
f_r [Hz]	Rated motor frequency
I_a [A]	Current output current
IEC	International Electrotechnical Commission
I_{mains} [A]	Mains current
I_{max} [A]	Maximum output current
IP	International Protection Code
IPC	Industrial PC
I_{PE} [mA]	Discharge current
I_r [A]	Rated output current
L [mH]	Inductance
M_r [Nm]	Rated motor torque
NEMA	National Electrical Manufacturers Association
P_{DC} [kW]	Power that can be additionally taken from the DC bus if a power-adapted motor is used for operation
PLC	Programmable control system
P_{loss} [W]	Power loss of inverter

P_r [kW]	Rated motor power
R [Ω]	Resistance
S_N [kVA]	Controller output power
U_{DC} [V]	DC supply voltage
UL	Underwriters Laboratories
U_M [V]	Output voltage
U_{mains} [V]	Mains voltage
VDE	Verband deutscher Elektrotechniker (Association of German Electrical Engineers)
Xk/y	Terminal y on terminal strip Xk (e. g. X5/28 = terminal 28 on terminal strip X5)

13.2 Index

A

Acceleration, 6.10-1

Acceleration time Tir, additional setpoint of NSET, 8.5-20

Accessories, 12-1
- General, 12.1-1
- Type-specific, 12.2-1

Activating the incremental encoder, 6.7-1

Actual motor current, 8.2-27 , 8.2-50 , 8.5-7 , 9.1-1

Actual motor voltage, 8.2-27 , 8.2-50 , 8.5-6 , 9.1-1

Actual speed value, 8.2-27 , 8.2-50 , 8.5-6 , 9.1-1

Additional setpoint, 8.5-6

Ambient conditions
- climatic, 3.1-1
- electrical, 3.1-2
- Mechanical, 3.1-2

Analog inputs
- setting input range with jumper X3, 5.8-8
- Signals, 6.5-4
- terminal assignment, 5.8-8

Analog outputs
- Configuration, 6.5-6
- Signals, 6.5-6
- terminal assignment, 5.8-8

Application, as directed, 1.2-1

Application as directed, 1.2-1

Application datum, Display, 9.1-1

B

Basic function, 8.5-2

Boost correction, influence of, 6.11-5 , 6.11-10 , 8.5-8

Braking, 6.10-1

Bus off, 8.3-2

C

Cable
- For control connections, 5.3-3
- for the motor connection, 5.2-10 , 5.3-1

Cable cross-section, Motor cable, 5.2-11

Cable cross-sections, 10.3-1
- mains connection, 5.4-5 , 5.5-5 , 5.6-5 , 5.7-5

Calibration, Application datum, 9.1-1

CAN bus identifier, 8.5-24

CE conformity, 1.2-1

CE-typical drive system, 5.4-1 , 5.5-1 , 5.6-1 , 5.7-1

Central supply. ***Siehe DC-bus connection***

Changing parameters
- EMZ9371BC keypad, 7.2-7 , 7.2-8
- Keypad EMZ9371BC, 7.2-4 , 7.2-6 , 7.2-9

Changing the direction of rotation, 6.10-5

Clamp operation, 9.4-2

Code, 7.1-1

Code table, 8.5-1

Commissioning, 6-1
- before switching on, 6.1-1
- Entry of motor data, 6.6-1

Communication modules, 5.12-1

Compensation equipment, Interaction with, 5.2-3

Configuration, 8-1
- Analog input signals, 6.5-4
- Analog output signals, 6.5-6
- Analog outputs, 6.5-6
- changing the direction of rotation, 6.10-5
- Code table, 8.5-1
- Controller inhibit (DCTRL1-CINH), 6.4-1
- Current limits, 6.6-13
- Digital input signals, 6.5-1
- Digital output signals, 6.5-3
- Digital outputs, 6.5-3
- Display functions, 9.1-1
- Maximum field frequency, 6.10-1
- Minimum field frequency, 6.10-1
- Monitoring
  Current load of controller (Ixt monitoring), 8.3-4
  Current load of motor (I^2 x t-monitoring), 2.2-1 , 8.3-6
  Heatsink temperature, 8.3-7
  Monitoring times for process data input objects, 8.3-2
- monitoring, 8.3-1
  bus off, 8.3-2
  DC-bus voltage, 8.3-8
  motor temperature, 8.3-5
  reset node, 8.3-2
- Monitoring functions, Motor temperature, 2.2-1
- monitoring functions
  overview, 8.41
  responses, 8.3-1
- motor data collection, 6.6-14
- Oscillation damping, 6.11-3
- Quick stop (QSP), 6.10-4
- Relay output, 6.5-3
- Slip compensation, 6.11-1
- switching frequency of inverter, 6.9-1
- Table of attributes, 8.7-1
- Thermal motor monitoring, 2.2-1
- Umin boost, 6.8-6

Conformity, 1.2-1

Control cable, 5.3-3

Control terminals, 5.8-1
- Changing the assignment of X5, 6.5-1
- Changing the assignment of X6, 6.5-1

Control word (AIF), 8.5-13

Controller
- application as directed, 1.2-1
- in clamp operation, 9.4-2
- labelling, 1.2-1

Controller inhibit, Drive behaviour, 6.4-1

Current characteristic, current derating, 3.6-1

Current derating, 3.6-1

Current limits, 6.6-13

Current load of controller, Ixt monitoring, 8.3-4

Current load of motor, I2 x t-monitoring, 2.2-1 , 8.3-6

D

DC injection braking (GSB)
- automatic, 8.2-43 , 8.2-72
- manual, 8.2-41 , 8.2-70

DC supply, 5.3-1 , 5.4-4 , 5.5-4 , 5.6-4 , 5.7-4

DC-bus connection
- Central supply, 10.5-1
- Distributed supply, 10.4-1

DC-bus operation, 10-1
- Conditions, 10.2-1
- Several drives, 10-1

DC-bus voltage, 8.2-27 , 8.2-50 , 8.3-8 , 8.5-6 , 9.1-1
- monitoring, 8.3-8
- overvoltage, 8.3-8
- Undervoltage, 8.3-8

Deceleration, 6.10-1

Deceleration time Tif, additional setpoint of NSET, 8.5-20

Definition of notes used, 1.4-1

Definitions, Terms, 13.1-1

Derating, 6.6-14 , 6.9-1 , 6.11-3 , 8.2-46 , 8.2-75

device control, 8.5-2

Device protection, 2.3-2

Diagnostics, 7.2-10 , 9.1-1 , 9.1-2

Diameter calculator (DCALC1), 8.2-1

Digital frequency input, connection to X9, 5.11-1

Digital frequency output, connection to X10, 5.11-1

Digital input signals, 6.5-1

Digital inputs, Terminal assignment, 5.8-8

Digital inputs/outputs, Terminal assignment, 11.3-2

Digital output signals, 6.5-3

Digital outputs
- Configuration, 6.5-3
- terminal assignment, 5.8-8

Dimensions, 3.1-2 , 4.1-3 , 4.1-5 , 4.2-3 , 4.2-5 , 4.3-3 , 4.4-3 , 4.5-3

Direction of rotation, inhibiting, 8.2-47 , 8.2-76

Discharge current, Mobile systems, 5.2-4

Display
- Application datum, 9.1-1
- operating status, 9.2-1

Display functions, 9.1-1
- Possible values, 9.1-1

Display of operating data, 9.1-1

Display values, 9.1-1
- Calibration, 9.1-1

Disposal, 2.1-3

Distributed supply, *10.4-1*

Drive behaviour
- Controller inhibit, 6.4-1
- in the event of faults, 9.3-1
- Influence of the motor cable length, 5.2-10

Drive errors, 9.4-1

E

E.l.c.b., 5.2-3
- operation at, 5.2-3

Earth-leakage circuit breaker, 5.2-3
- operation at, 5.2-3

Electrical installation, system bus (CAN), 5.9-1

EMC, what to do in case of interferences, 5.3-6

Emergency-off, Controller inhibit, 6.4-1

EMZ9371BC keypad, changing parameters, 7.2-7 , 7.2-8

EN 61000-3-2, 3.1-2 , 5.2-1
- operation on public supply systems, 5.2-1

Entry of motor data, 6.6-1

Error analysis, Via history buffer, 9.2-1

Error messages, 9.5-1
- causes and remedies, 9.5-1
- configuration, 8.41
- General, 9.5-1
- Resetting, 9.5-5

Exceeding of the maximum speed (NMAX), 8.3-3

Explanations, Code table, 8.5-1

External error (EEr), 8.3-8

F

Failure of a motor phase, 8.3-4

Fault analysis, Via history buffer, 9.2-1

Fault elimination, 9.4-1

Fault messages
- causes and remedies, 9.5-1
- OC3 in clamp operation, 9.4-2

Fault responses, 8.3-1

Feedback system, wiring, 5.10-1

Field controller, 6.8-8 , 8.5-8

Field frequency
- maximum, 6.10-1
- Minimum, 6.10-1

Flying restart circuit, 2.3-1

Free spaces, 3.1-2

Function blocks, 8.2-1
- diameter calculator (DCALC1), 8.2-1
- internal motor control, vector control (MCTRL2), 8.2-48
- master frequency input (DFIN), 8.2-5
- master frequency output (DFOUT), 8.2-8
- master frequency processing (DFSET), 8.2-18
- master frequency ramp-function generator (DFRFG1), 8.2-13

Function keys, keypad XT EMZ9371BC, 7.2-4

Functional test, safety function, 11.4-2 , 11.4-5

Fuses, 10.3-1
- mains connection, 5.4-5 , 5.5-5 , 5.6-5 , 5.7-5

G

General accessories, 12.1-1

General data, 3.1-1 , 7.2-1

H

Harmonic currents
- Limitation according to EN 61000-3-2, 5.2-1
- limitation in accordance with EN 61000-3-2, 3.1-2

Heatsink temperature, monitoring, 8.3-7

History buffer, 9.2-1
- Assembly, 9.2-2
- delete, 9.2-2

I

Imax limit in motor mode, 6.6-13 , 8.2-27 , 8.2-50 , 8.5-4
- in generator mode, 6.6-13 , 8.2-27 , 8.2-50 , 8.5-4

Incremental encoder
- At X8, 5.10-2 , 6.7-2
- at X9, 5.10-3 , 6.7-3
- operation with, 8.2-59
- with HTL level, 5.10-3 , 6.7-3
- With TTL level, 5.10-2 , 6.7-2

Input signals
- Analog, Configuration, 6.5-4
- Digital, Configuration, 6.5-1

Inputs
- Digital, Response times, 6.5-1
- KTY, 6.6-10
- PTC, 6.6-8

Installation
- Mechanical
  Cold plate technique, 4.1-4 , 4.2-4
  Standard mounting 45 kW, 4.3-2
  Thermally separated mounting (push-through technique) 45 kW, 4.3-3
  With fixing bracket 75 ... 90 kW, 4.5-3
- mechanical
  thermally separated (push-through technique) 15 ... 30 kW, 4.2-3
  thermally separated mounting (push-through technique) 45...55 kW, 4.4-3

Interaction with compensation equipment, 5.2-3

Interferences, eliminating EMC interferences, 5.3-6

Internal motor control
- V/f characteristic control (MCTRL1), setting of V/f characteristic, 8.2-33
- with vector control (MCTRL2)
  torque control with speed limitation, 8.2-64
  torque limitation, 8.2-61

Internal motor control (MCTRL)
- inhibiting the direction of rotation, 8.2-47 , 8.2-76
- limiting output current, 8.2-63
- limiting speed setpoint, 8.2-33 , 8.2-58
- limiting the output current, 8.2-35
- quick stop (QSP), 8.2-40 , 8.2-69
- speed control, 8.2-34 , 8.2-59
- speed setpoint selection, 8.2-33 , 8.2-58
- with vector control (MCTRL2), 8.2-48

IT system, 5.2-2

J

JOG setpoint, 8.5-6

Jumper X3, for input range of analog setpoint selection, 5.8-8

K

Keypad EMZ9371BC, Changing parameters, 7.2-4 , 7.2-6 , 7.2-9

Keypad XT EMZ9371BC
- function keys, 7.2-4
- status display, 7.2-2

KTY motor monitoring, 6.6-10

L

Labelling, controller, 1.2-1

LED display, 9.2-1

Legal regulations, 1.2-1

Liability, 1.2-2

Light-emitting diodes, 9.2-1

Limit class C1/C2, 5.2-6

M

Mains choke, Assignment to standard device, 5.2-8 , 5.4-8 , 5.5-7 , 5.6-6 , 5.7-6

Mains connection, 5.3-1 , 5.4-4 , 5.5-4 , 5.6-4 , 5.7-4
- AC mains, 3.1-2
- DC mains, 3.1-2

Mains filter, Assignment to standard device, 5.2-8 , 5.4-8 , 5.5-7 , 5.6-6 , 5.7-6

Manufacturer, 1.2-1

Master frequency input (DFIN), 8.2-5

Master frequency output (DFOUT), 8.2-8

Master frequency processing (DFSET), 8.2-18

Master frequency ramp-function generator (DFRFG1), 8.2-13

Max. mains voltage range, 3.1-2

Maximum speed, 6.10-1 , 8.2-26 , 8.2-49 , 8.5-3

Mechanical installation
- Cold plate technique, 4.1-4 , 4.2-4
- Standard mounting 45 kW, 4.3-2
- thermally separated (push-through technique) 15 ... 30 kW, 4.2-3
- Thermally separated mounting (push-through technique) 45 kW, 4.3-3
- thermally separated mounting (push-through technique) 55 kW, 4.4-3
- With fixing bracket 75 ... 90 kW, 4.5-3

Menu structure, XT EMZ9371BC keypad, 7.2-11

Message, 8.3-1

Minimum speed, 6.10-1 , 8.2-26 , 8.2-49 , 8.5-3

Mobile systems, 5.2-4

Monitoring, 8.3-1
- bus off, 8.3-2
- configuring, 8.41
- Current load of controller, Ixt monitoring, 8.3-4
- Current load of motor, I2 x t-monitoring, 2.2-1 , 8.3-6
- DC-bus voltage, 8.3-8
- Exceeding of the maximum speed (NMAX), 8.3-3
- External error (EEr), 8.3-8
- Failure of a motor phase (LP1), 8.3-4
- Heatsink temperature, 8.3-7
- Monitoring times for process data input objects, 8.3-2
- motor cable earth fault (OC2), 8.3-3
- motor cable overcurrent (OC1), 8.3-3
- motor temperature, 8.3-5
- overload acceleration, deceleration (OC3), 8.3-3
- possible responses, 8.41
- reset node, 8.3-2
- responses, 8.3-1
  message, 8.3-1
  TRIP, 8.3-1
  warning, 8.3-1

Monitoring functions
- Motor temperature, 2.2-1
- Overview, 8.41
- responses, 8.3-1

Monitoring times for process data input objects, 8.3-2

Motor, thermal monitoring, with PTC thermistor, 6.6-8 , 6.6-10

motor, Thermal monitoring, Sensorless, 2.2-1

Motor cable, 5.2-10 , 5.3-1
- Cable cross-section, 5.2-11
- for trailing cable, 5.2-11
- Influence of the length, 5.2-10
- length, 3.1-2
- max. length, 5.2-7
- permanently installed, 5.2-11
- Specification, 5.2-10

Motor cable earth fault (OC2), 8.3-3

Motor cable overcurrent (OC1), 8.3-3

Motor connection, 3.1-2

Motor cos phi, 6.6-2 , 6.6-15 , 6.8-9 , 8.2-53 , 8.5-10

Motor data, identification, 6.6-14

Motor data collection, 6.6-14

Motor leakage inductance, 8.2-52 , 8.5-9

Motor magnetising current, optimising in case of vector control, 6.11-9

Motor monitoring, 2.2-1

Motor potentiometer
- acceleration time Tir, 8.5-22
- deceleration time Tif, 8.5-22

Motor protection, 2.3-2

Motor rotor resistance, 8.2-52 , 8.5-9

Motor stator inductance, 6.6-15 , 6.8-9 , 8.2-53 , 8.5-10

Motor stator resistance, 6.6-15 , 8.2-52 , 8.5-9

Motor temperature, monitoring, 8.3-5

Mounting conditions
- Dimensions, 3.1-2
- Free spaces, 3.1-2
- Mounting place, 3.1-2
- Mounting position, 3.1-2
- Weights, 3.1-2

Mounting place, 3.1-2

Mounting position, 3.1-2

N

Nameplate, 1.1-3

Network of several drives, Function, 10.1-1

Noise optimised operation, 6.9-1

Notes, definition, 1.4-1

O

Operating behaviour
- Optimise, 6.8-1
- Optimising, 6.11-1

Operating conditions, 3.1-1 , 7.2-1
- Ambient conditions, Mechanical, 3.1-2
- ambient conditions
  climatic, 3.1-1
  electrical, 3.1-2
- Mounting conditions
  Dimensions, 3.1-2
  Free space, 3.1-2
  Mounting place, 3.1-2
  Mounting position, 3.1-2
  Weight, 3.1-2

Operating mode
- for standard applications, 6.1-2 , 6.8-3
- Select, 6.8-1
- select, 6.1-1 , 6.8-1
- V/f characteristic control, 6.8-4
  commissioning example, 6.3-1
- vector control, 6.8-8
  commissioning example, 6.3-5

Operating status, display, 9.2-1

Operation
- at earth-leakage circuit breaker, 5.2-3
- noise optimised, 6.9-1

Operation on public supply systems, EN 61000-3-2, 5.2-1

Operation with increased rated power, 12.2-3

Operation with rated power, 12.2-1

Optimisation of the controller and mains load, 5.2-5

Oscillation damping, 6.11-3 , 8.2-46 , 8.2-75
- Reduction of speed oscillations, 6.11-3

Output current, limiting, 8.2-35 , 8.2-63

Output signals
- Analog, Configuration, 6.5-6
- Digital, Configuration, 6.5-3

Outputs
- Analog, 6.5-6
- Digital, 6.5-3

Overload acceleration, deceleration (OC3), 8.3-3

Overview, Accessories, 12-1

Overvoltage threshold, DC-bus voltage, 8.3-8

P

Parameter setting, 7-1
- code, 7.1-1
- with bus system, 7.1-2
- With XT EMZ9371BC keypad, 6.3-1 , 7.2-1

Password, 8.5-10

Pollution, 3.1-1

Power system, 3.1-2

Protection against unexpected start-up, 11.1-1
- operating mode, 11.2-1
- safety relay, 3.3-1 , 11.3-1

Protection of persons, 2.3-1
- with earth-leakage circuit breaker, 5.2-3

PTC motor monitoring, 6.6-8

Q

QSP (quick stop), 8.2-40 , 8.2-69

Quick stop, 6.10-4

Quick stop (QSP), 8.2-40 , 8.2-69

Quick stop deceleration time, 6.10-4 , 8.2-30 , 8.2-53 , 8.5-11

R

Rated data
- for 400 V mains voltage, 3.4-1 , 3.5-1
- Operation with increased rated power, 3.5-1
- Operation with rated power, 3.4-1
  Rated data 480 V, 3.4-3

Rated motor current, 6.6-1 , 6.6-15 , 6.8-9 , 8.2-52 , 8.5-9

Rated motor frequency, 6.6-1 , 6.6-15 , 6.8-9 , 8.2-29 , 8.2-52 , 8.5-9

Rated motor power, 6.6-1 , 6.8-8 , 8.5-9

Rated motor speed, 6.6-1 , 6.6-15 , 6.8-9 , 8.2-29 , 8.2-52 , 8.5-9

Rated motor voltage, 6.6-2 , 6.6-15 , 6.8-5 , 6.8-9 , 8.2-29 , 8.2-52 , 8.5-9

Reaction times of digital inputs, 6.5-1

Reduce noise emissions, 5.2-6

Relay output, Configuration, 6.5-3

Residual hazards, 2.3-1

Responses, 8.3-1
- message, 8.3-1
- TRIP, 8.3-1
- warning, 8.3-1

Running optimisation, 6.11-1

S

Safe standstill, 11.1-1

Safe torque off, 11.1-1
- device variant with, 5.8-5
- device variant without, 5.8-4
- functional test, 11.4-2 , 11.4-5
- operating mode, 11.2-1
- safety relay, 3.3-1 , 11.3-1

Safety, safety engineering, 11-1

Safety engineering, 11-1

Safety function
- functional test, 11.4-2 , 11.4-5
- Safe torque off, 11.1-1

Safety instructions, 2-1
- definition, 1.4-1
- layout, 1.4-1

Safety relay, 3.3-1 , 11.3-1
- Connector X11
  Terminal assignment, 11.3-2
  Wiring, 11.3-2

Safety relay KSR, Terminal assignment, 5.8-8 , 11.3-2

Selecting the operating mode, speed mode, setting acceleration and deceleration times, 6.10-3

Selection, operating mode, 6.1-1 , 6.8-1

Selection of motor type, 6.6-1 , 8.2-29 , 8.2-52 , 8.5-9

Selection of the feedback system, 6.7-1 , 8.2-50 , 8.5-4

Setting integral action component, 8.2-60

Setting the acceleration time, 6.10-3

Setting the deceleration time, 6.10-3

Setting the feedback system, 6.7-1

Setting the speed feedback, 6.7-1

Site altitude, 3.1-2

Slip compensation, 6.11-1 , 8.2-47 , 8.2-76

Speed control, 8.2-34 , 8.2-59
- adapting the speed controller, 8.2-59
- at vector control (MCTRL2), adapting the speed controller, 8.2-34
- with vector control (MCTRL2)
  setting integral action component, 8.2-60
  speed feedback, 8.2-59
  temperature detection, 8.2-60

Speed feedback, 8.2-59

Speed mode, setting acceleration and deceleration times, 6.10-3

Speed oscillations, 6.11-3

Speed setpoint limitation, 8.2-33 , 8.2-58

Speed setpoint selection, 8.2-33 , 8.2-58

Stability, of the motor, 8.2-61

Status display, keypad XT EMZ9371BC, 7.2-2

Status word AIF, 8.5-16 , 9.1-2

Stopping, 6.10-1

Supply conditions, 5.4-5 , 5.4-7 , 5.5-5 , 5.5-6 , 5.6-5 , 5.6-6 , 5.7-5 , 5.7-6 , 10.3-1

Supply forms, IT system, 5.2-2

Supply forms / electrical supply conditions, 5.2-1

Switch-on, check before switching on, 6.1-1

Switching frequency, automatic current-depending change-over, 6.9-2 , 8.2-27 , 8.2-49 , 8.5-4

Switching frequency of inverter, 6.9-1
- noise optimised, 6.9-1

Switching frequency reduction, 6.9-2

System bus (CAN), wiring, 5.9-1

System error messages, 9.5-1
- configuration, 8.41
- General, 9.5-1
- Resetting, 9.5-5

T

Table of attributes, 8.7-1

Technical data, 3-1
- current characteristic, device protection by current derating, 3.6-1
- General data, 3.1-1
- Operating conditions, 3.1-1
- Operation with rated power, Rated data 480 V, 3.4-3

technical data, Operation with rated power, 3.4-1

Technicaldata, Operation with increased rated power, 3.5-1

Temperature detection, 8.2-60

Terminal assignment
- analog inputs, 5.8-8
- analog outputs, 5.8-8
- digital inputs, 5.8-8
- Digital inputs/outputs, 11.3-2
- digital outputs, 5.8-8
- Safety relay KSR, 5.8-8 , 11.3-2

Terminal data, 5.8-2 , 11.3-1

Terms
- controller, 13.1-1
- Definitions, 13.1-1
- drive, 13.1-1

Thermal monitoring, motor
- Sensorless, 2.2-1
- with PTC thermistor, 6.6-8 , 6.6-10

T_n current controller, 6.8-8 , 8.2-29 , 8.2-51 , 8.5-8

T_n slip controller, 6.11-1 , 8.2-29 , 8.5-8

T_n speed controller, 8.2-28 , 8.2-51 , 8.5-8

Torque control with speed limitation, in case of vector control (MCTRL2), 8.2-64

Torque limitation in the field weakening range, with vector control (MCTRL2), 8.2-61

TRIP, 8.3-1

Troubleshhoting and fault elimination, monitoring, DC-bus voltage, 8.3-8

Troubleshooting, 9.2-1
- Drive behaviour in the event of faults, 9.3-1
- Drive errors, 9.4-1

Troubleshooting and fault elimination, 9-1
- Monitoring, 8.3-1
  Current load of controller (Ixt monitoring), 8.3-4
  Current load of motor (I^2 x t-monitoring), 2.2-1 , 8.3-6
  DC-bus voltage, 8.3-8
  Heatsink temperature, 8.3-7
  Monitoring times for process data input objects, 8.3-2
- monitoring
  bus off, 8.3-2
  motor temperature, 8.3-5
  reset node, 8.3-2
  responses, 8.3-1

Type-specific accessories, 12.2-1

U

Umin boost, 6.8-6

Undervoltage threshold, DC-bus voltage, 8.3-8

V

V/f characteristic, setting of, 8.2-33

V/f characteristic control, 6.8-4
- boost correction, 6.11-5
- commissioning example, 6.3-1

Vector control, 6.8-8
- commissioning example, 6.3-5
- optimising motor magnetising current, 6.11-9

Voltage boost, optimising via boost correction, 6.11-5

V_p current controller, 6.8-8 , 8.2-28 , 8.2-51 , 8.5-8

V_p speed controller, 8.2-28 , 8.2-51 , 8.5-8

W

Warning, 8.3-1

Warranty, 1.2-2

Weights, 3.1-2

Wiring
- digital frequency input to X9, 5.11-1
- digital frequency output to X10, 5.11-1
- in the control cabinet, 5.3-4
- Mobile systems, 5.2-4
- outside of the control cabinet, 5.3-5
- system bus (CAN), 5.9-1

Wiring according to EMC, 5.4-1 , 5.5-1 , 5.6-1 , 5.7-1

X

XT EMZ9371BC keypad, Menu structure, 7.2-11

© 04/2012

Lenze Automation GmbH
Hans-Lenze-Str. 1
D-31855 Aerzen
Germany

+49 (0)51 54 / 82-0

+49 (0)51 54 / 82 - 28 00

Lenze@Lenze.de

www.Lenze.com

Service

Lenze Service GmbH
Breslauer Straße 3
D-32699 Extertal
Germany

00 80 00 / 24 4 68 77 (24 h helpline)

+49 (0)51 54 / 82-11 12

Service@Lenze.de

EDSVF9333V ■ 13347725 ■ EN ■ 6.2-04/2012 ■ TD23

10 9 8 7 6 5 4 3 2 1